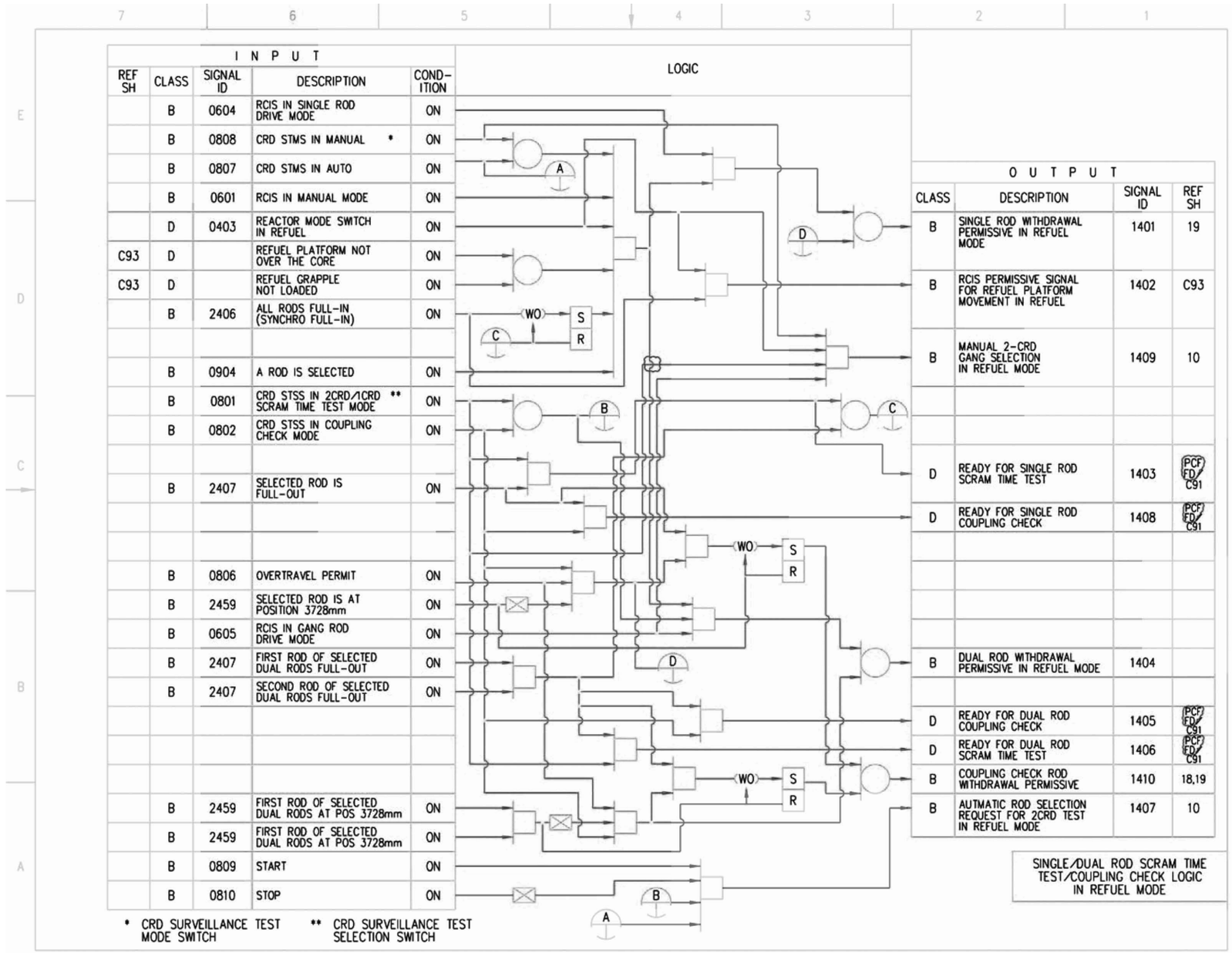

Figure 7.7-3 – Rod Control and Information System IBD (Sheet 14 of 87)

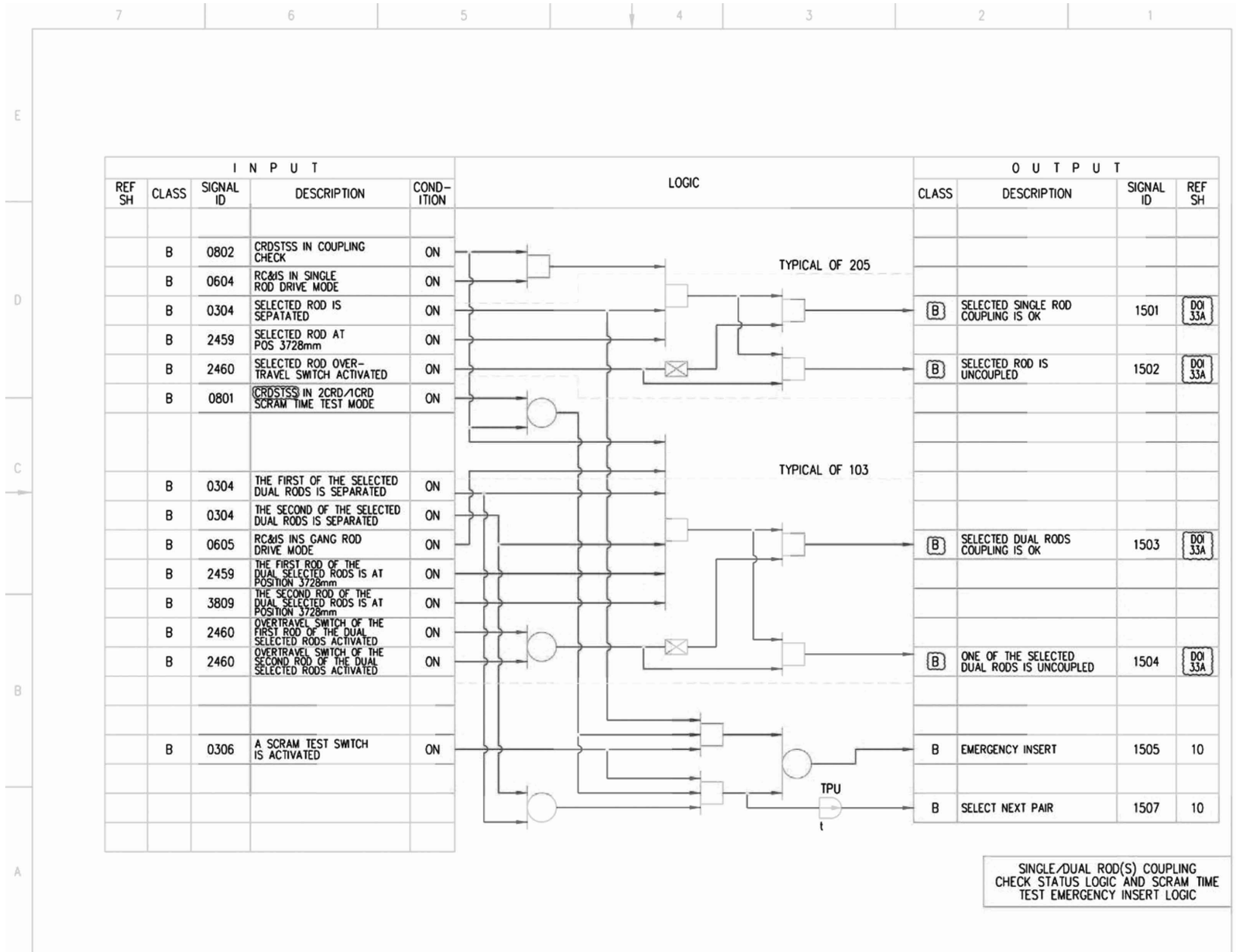

Figure 7.7-3 – Rod Control and Information System IBD (Sheet 15 of 87)

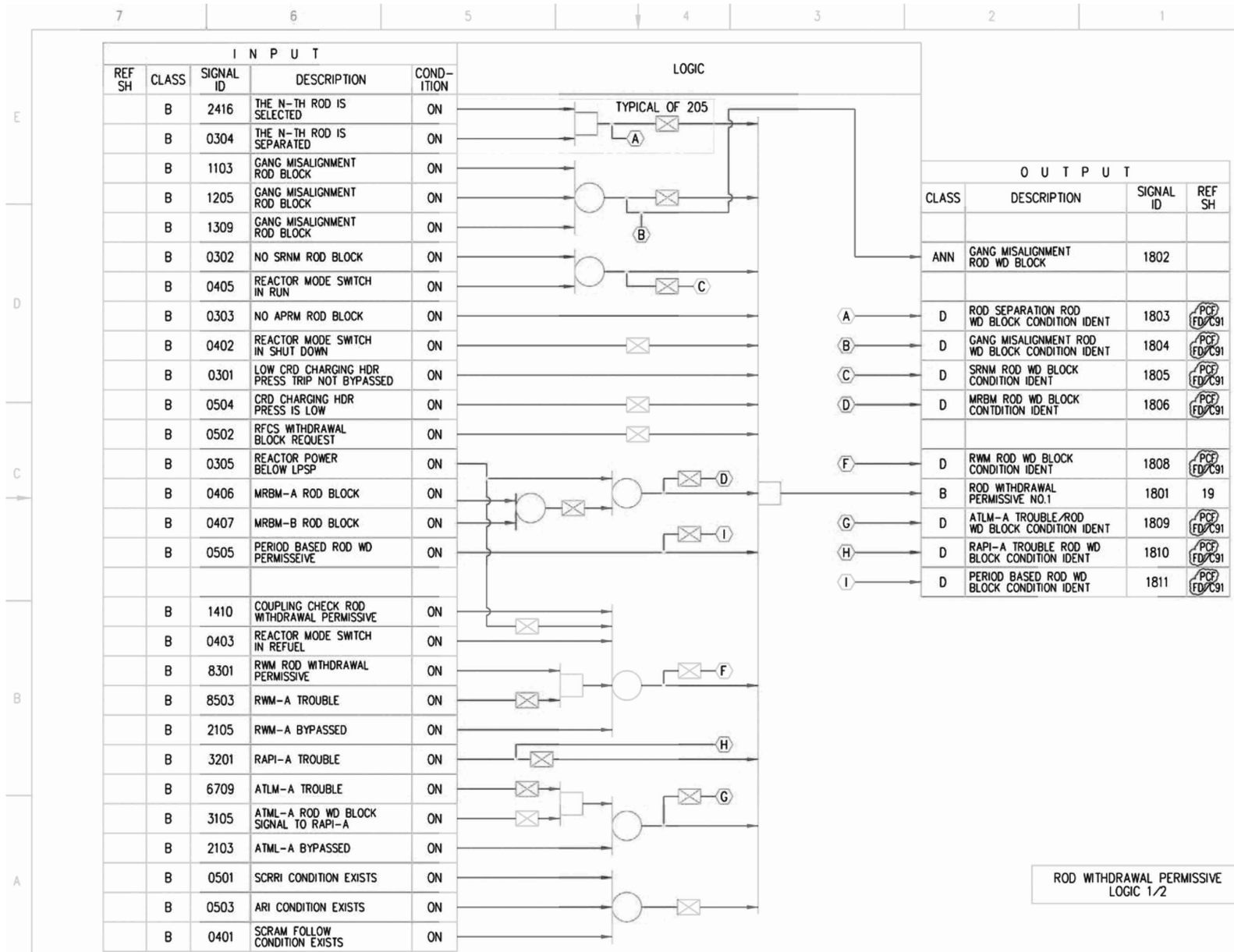

Figure 7.7-3 – Rod Control and Information System IBD (Sheet 18 of 87)

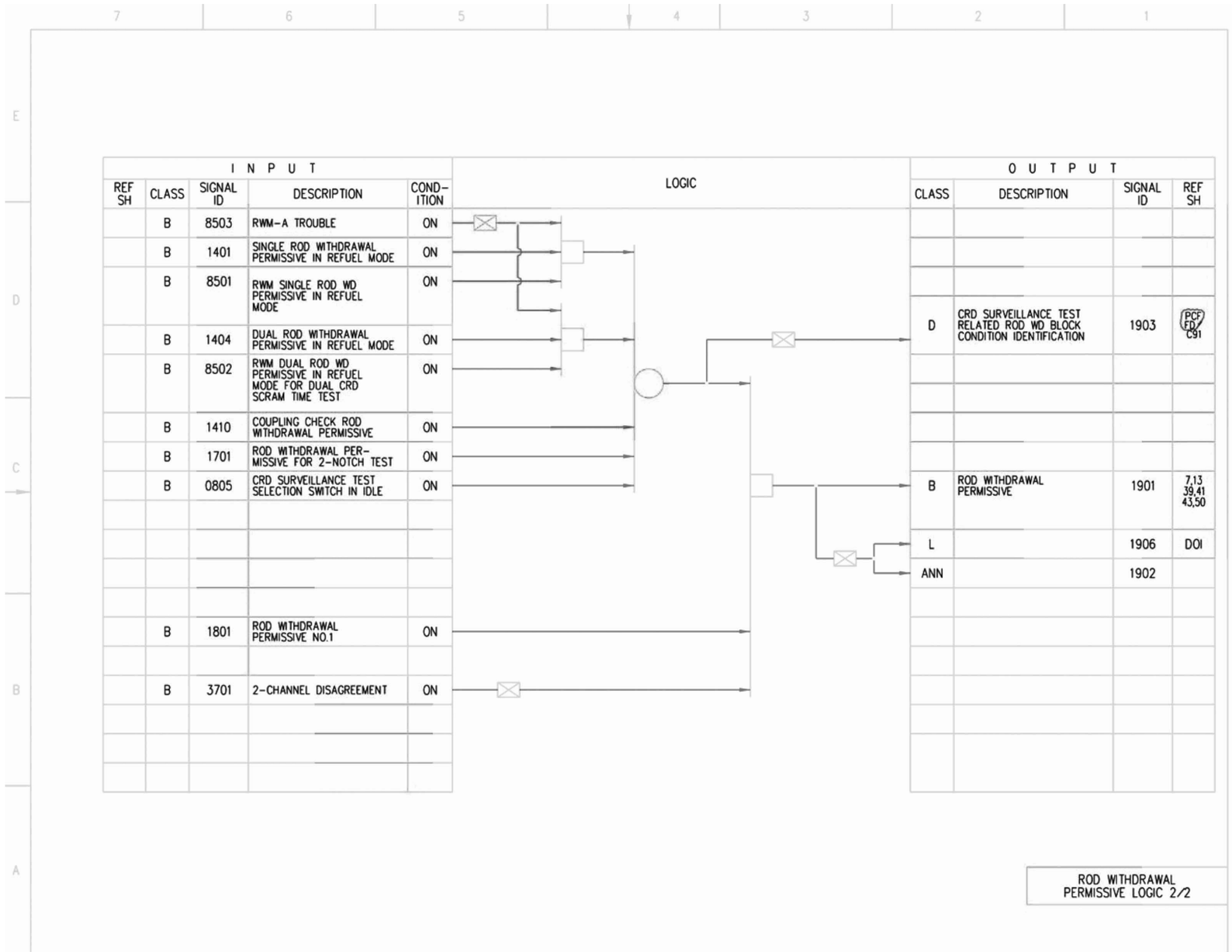

Figure 7.7-3 – Rod Control and Information System IBD (Sheet 19 of 87)

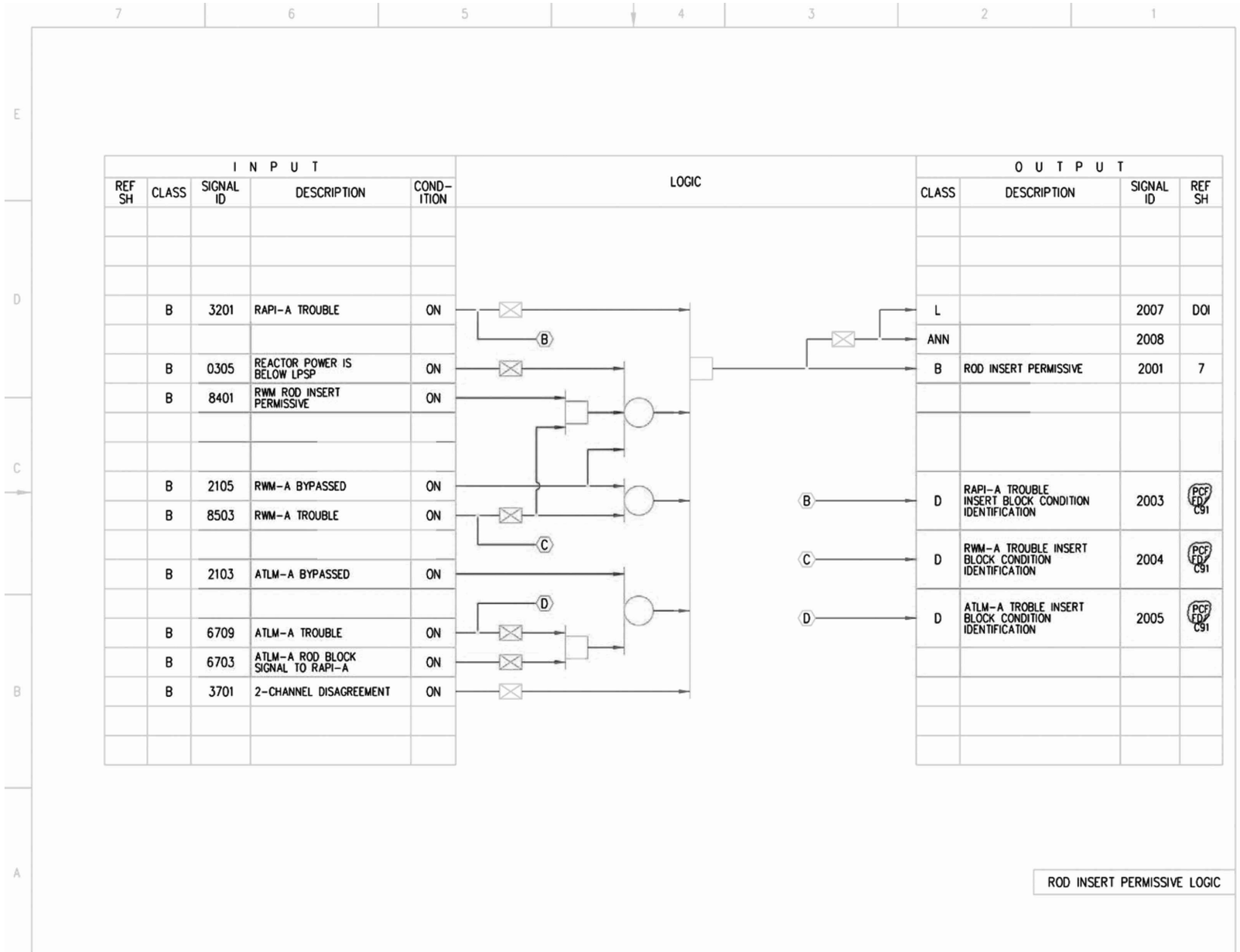

Figure 7.7-3 – Rod Control and Information System IBD (Sheet 20 of 87)

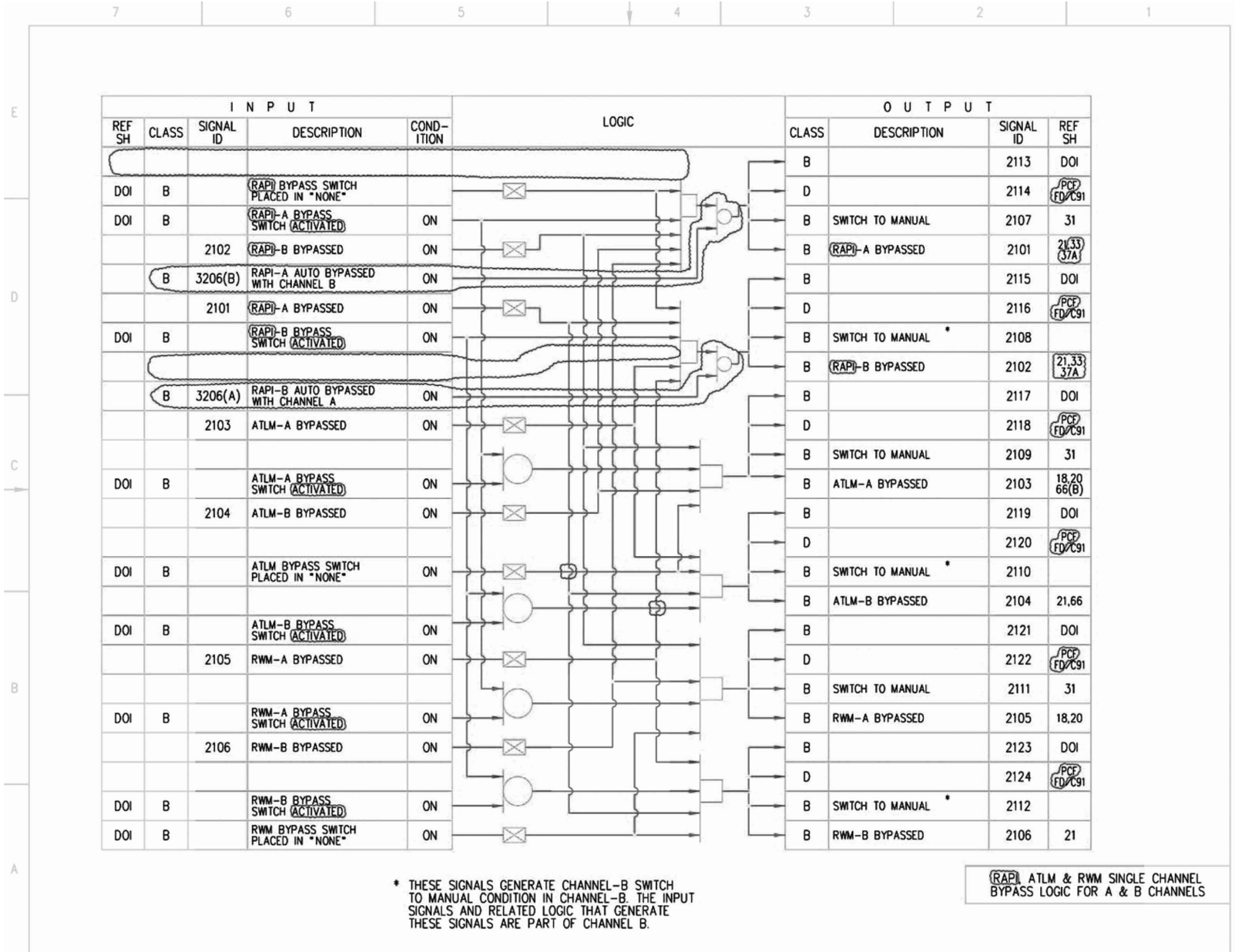

Figure 7.7-3 – Rod Control and Information System IBD (Sheet 21 of 87)

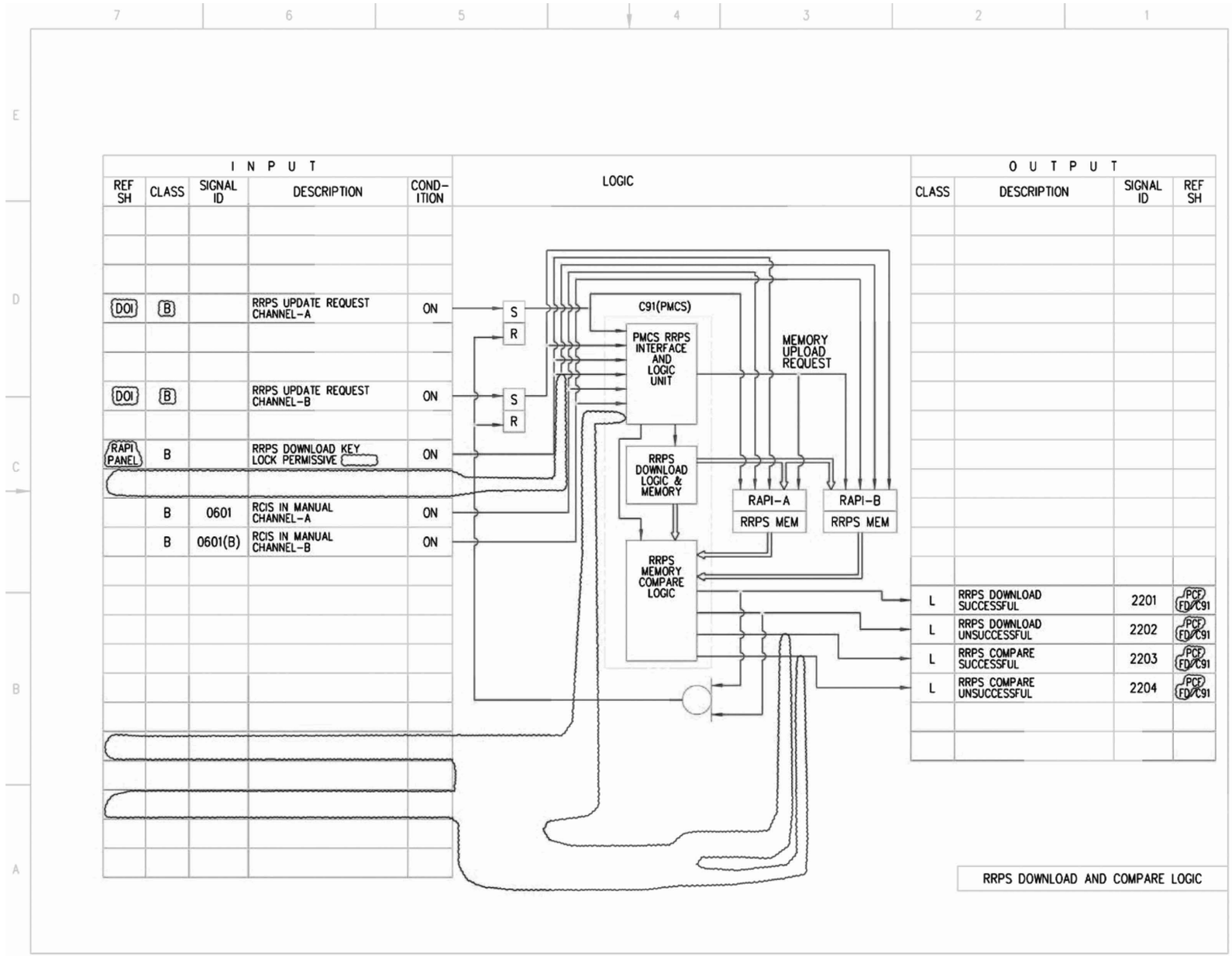

Figure 7.7-3 – Rod Control and Information System IBD (Sheet 22 of 87)

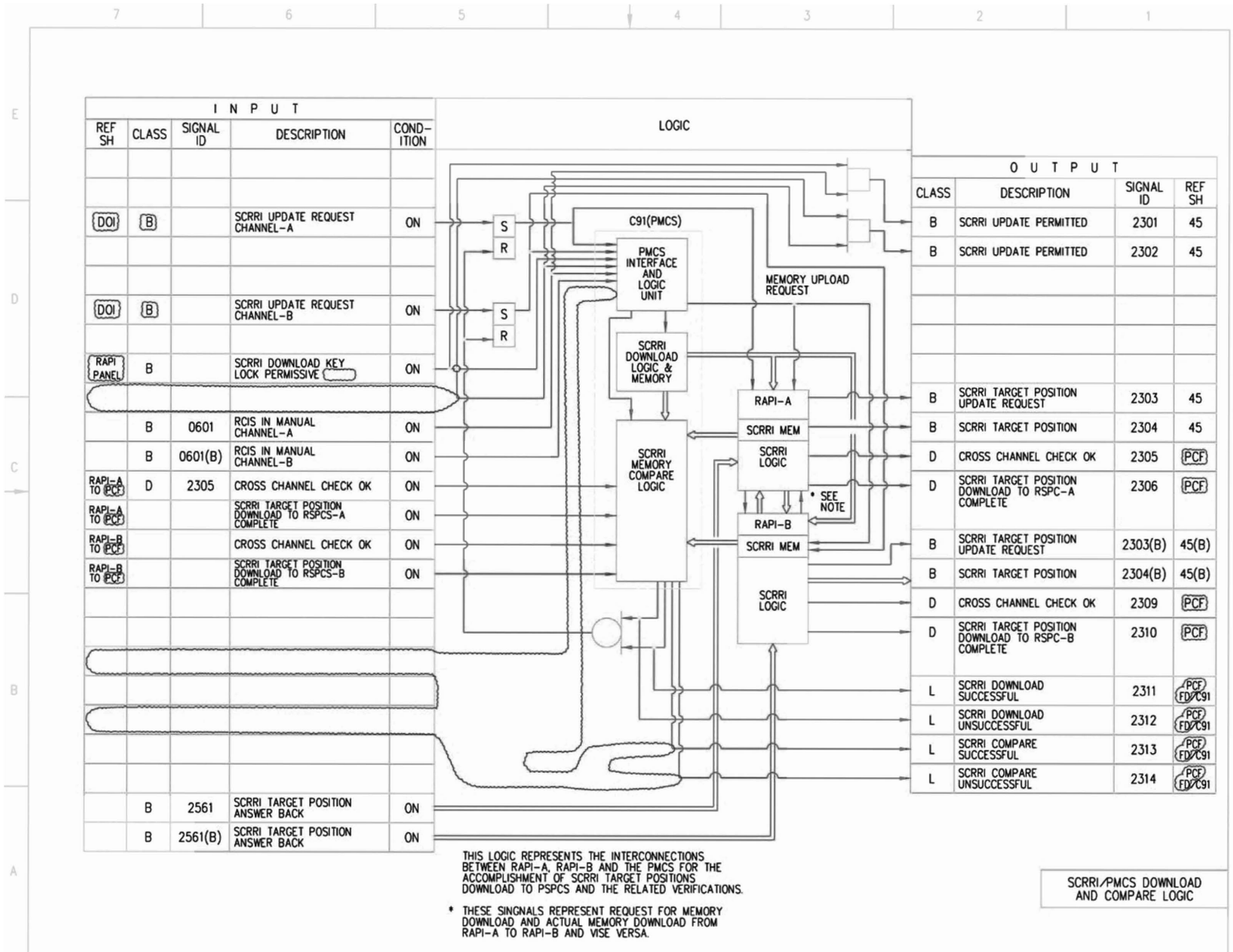

Figure 7.7-3 – Rod Control and Information System IBD (Sheet 23 of 87)

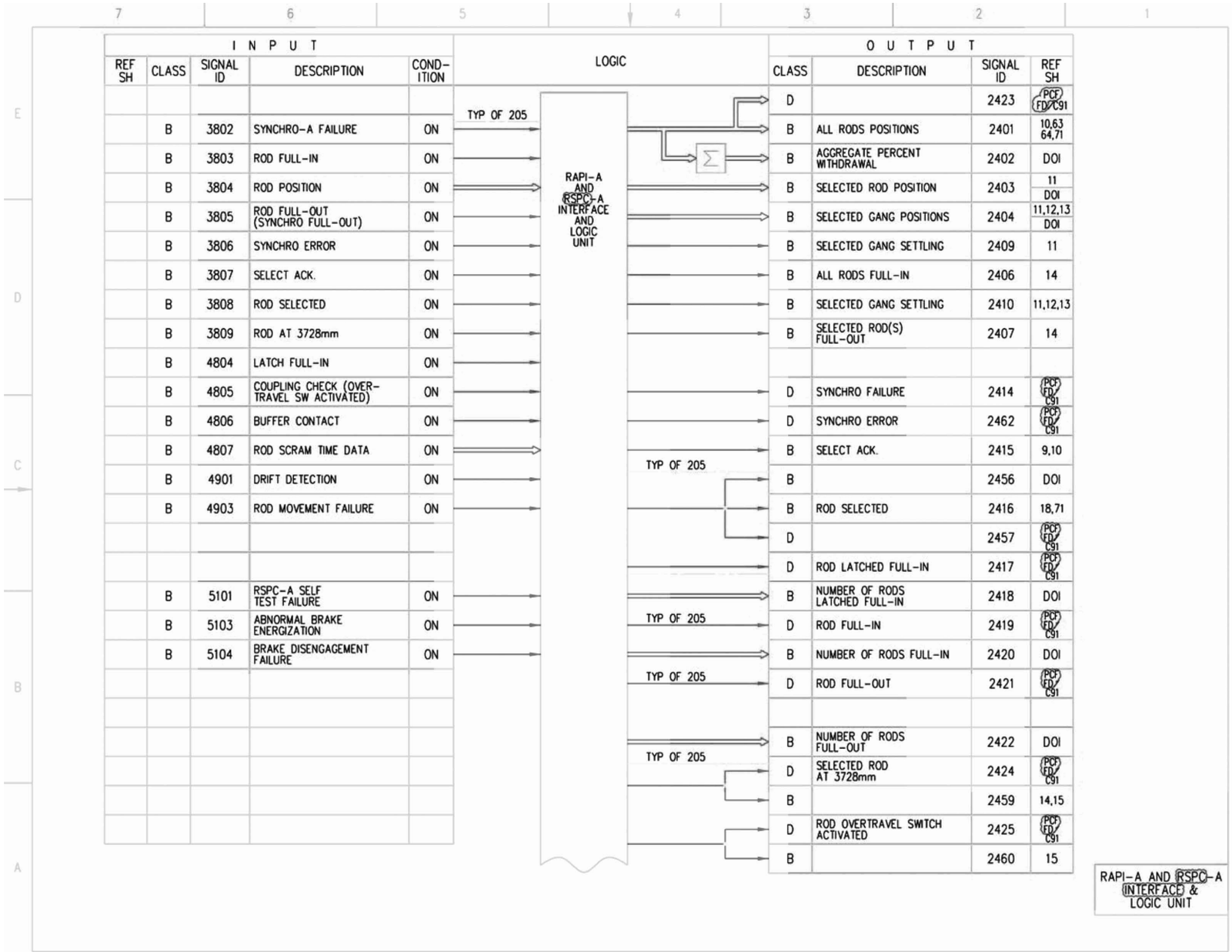

Figure 7.7-3 – Rod Control and Information System IBD (Sheet 24 of 87)

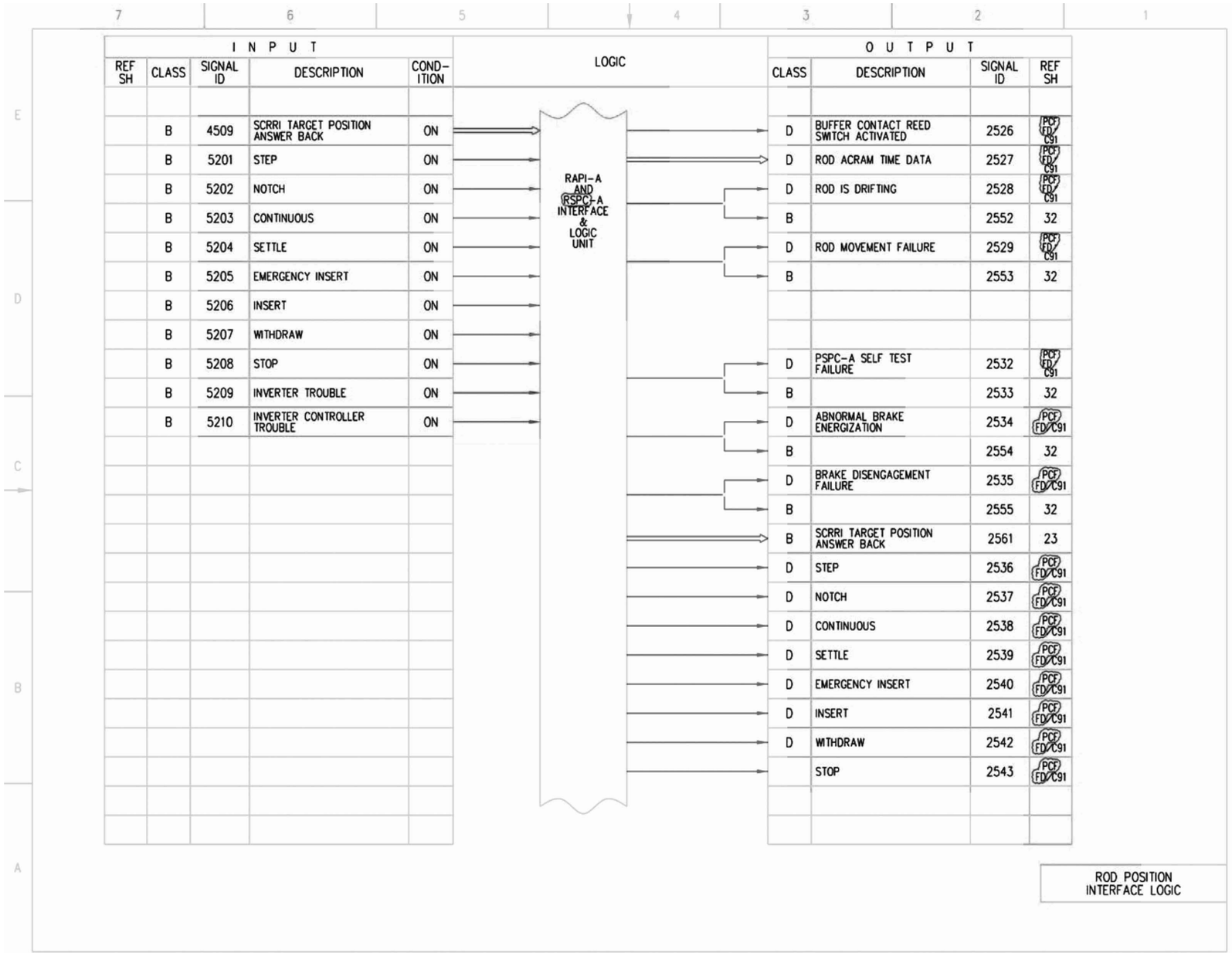

Figure 7.7-3 – Rod Control and Information System IBD (Sheet 25 of 87)

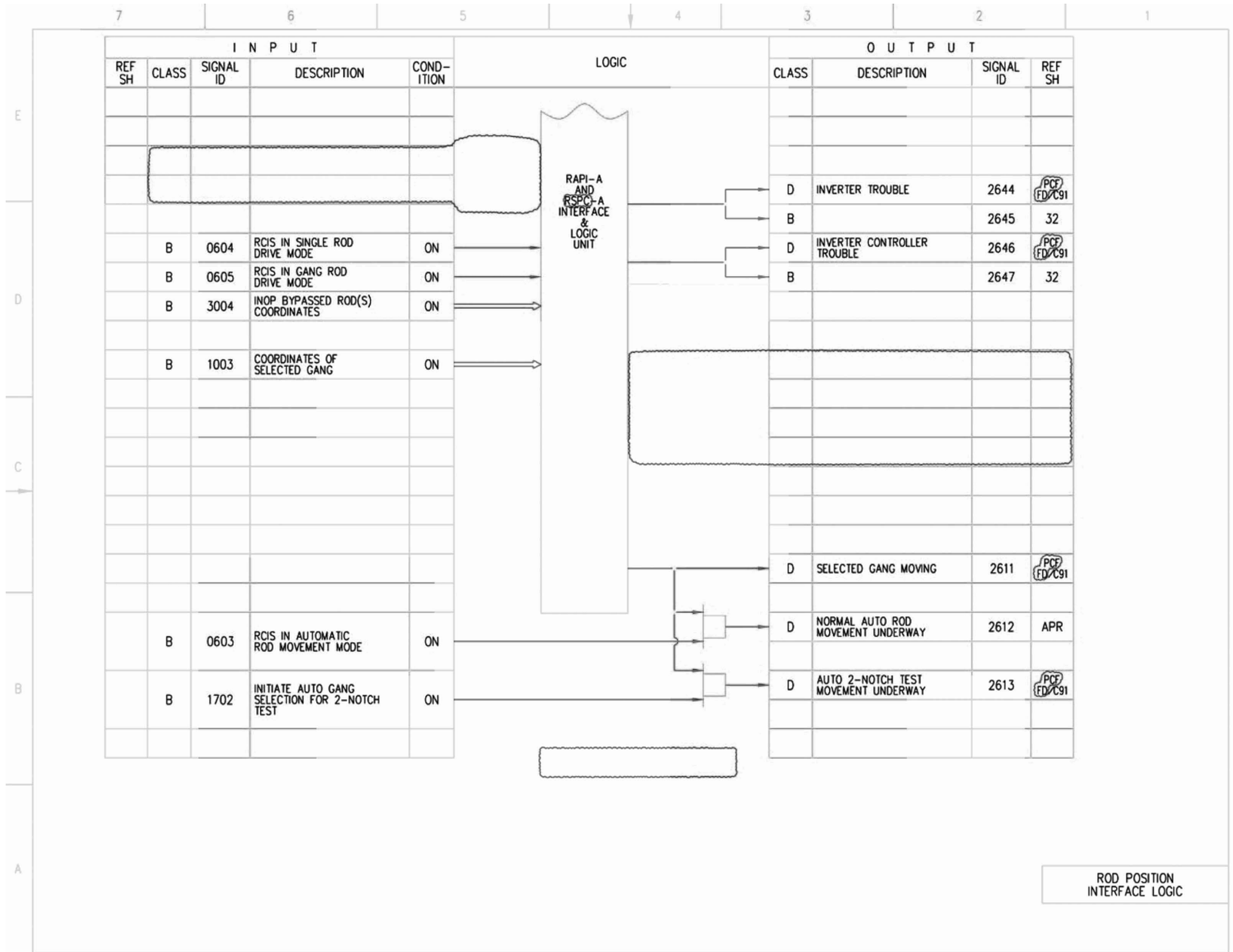

Figure 7.7-3 – Rod Control and Information System IBD (Sheet 26 of 87)

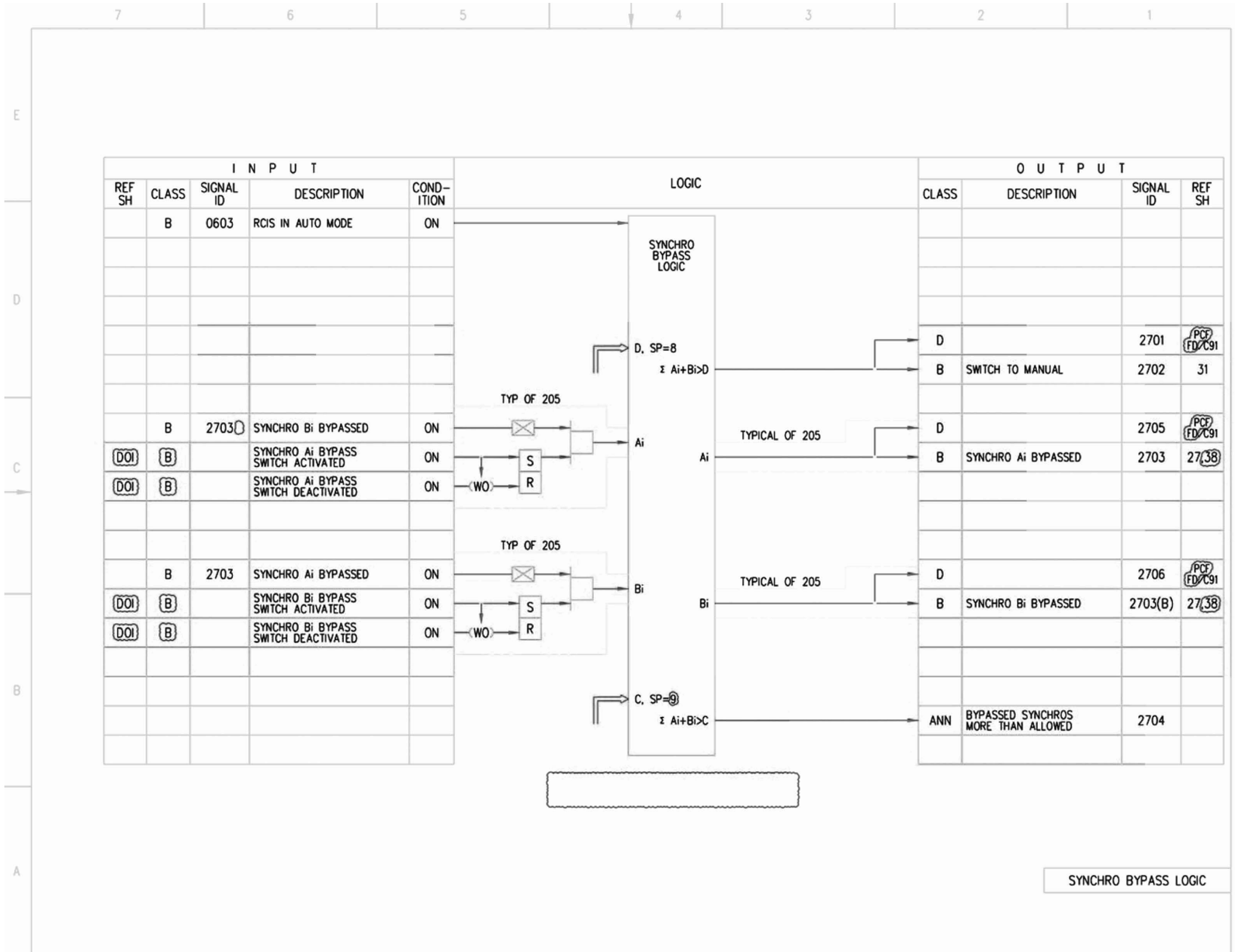

Figure 7.7-3 – Rod Control and Information System IBD (Sheet 27 of 87)

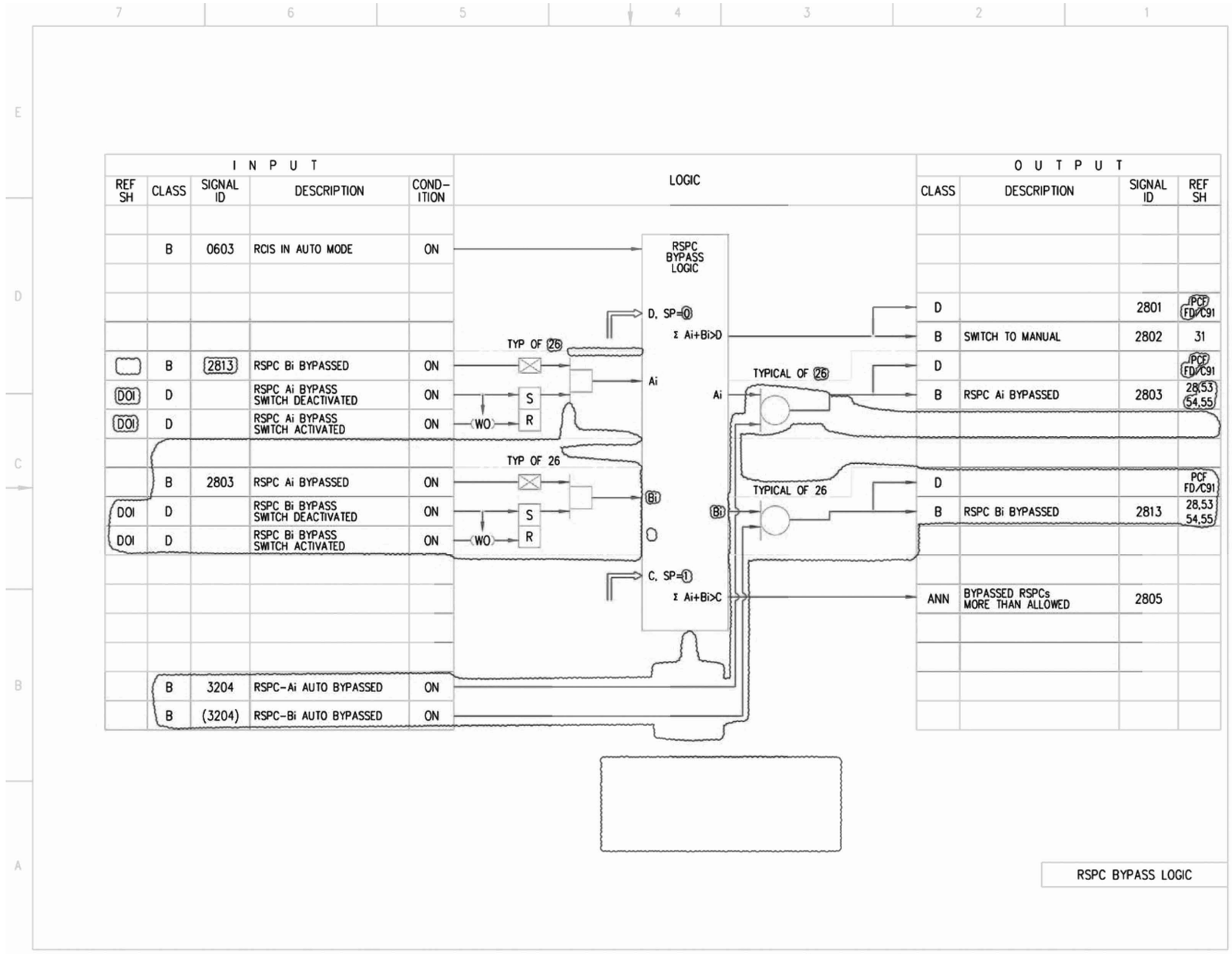

Figure 7.7-3 – Rod Control and Information System IBD (Sheet 28 of 87)

Figure 7.7-3 – ~~Rod Control and Information System IBD (Sheet 29 of 87)~~Not Used

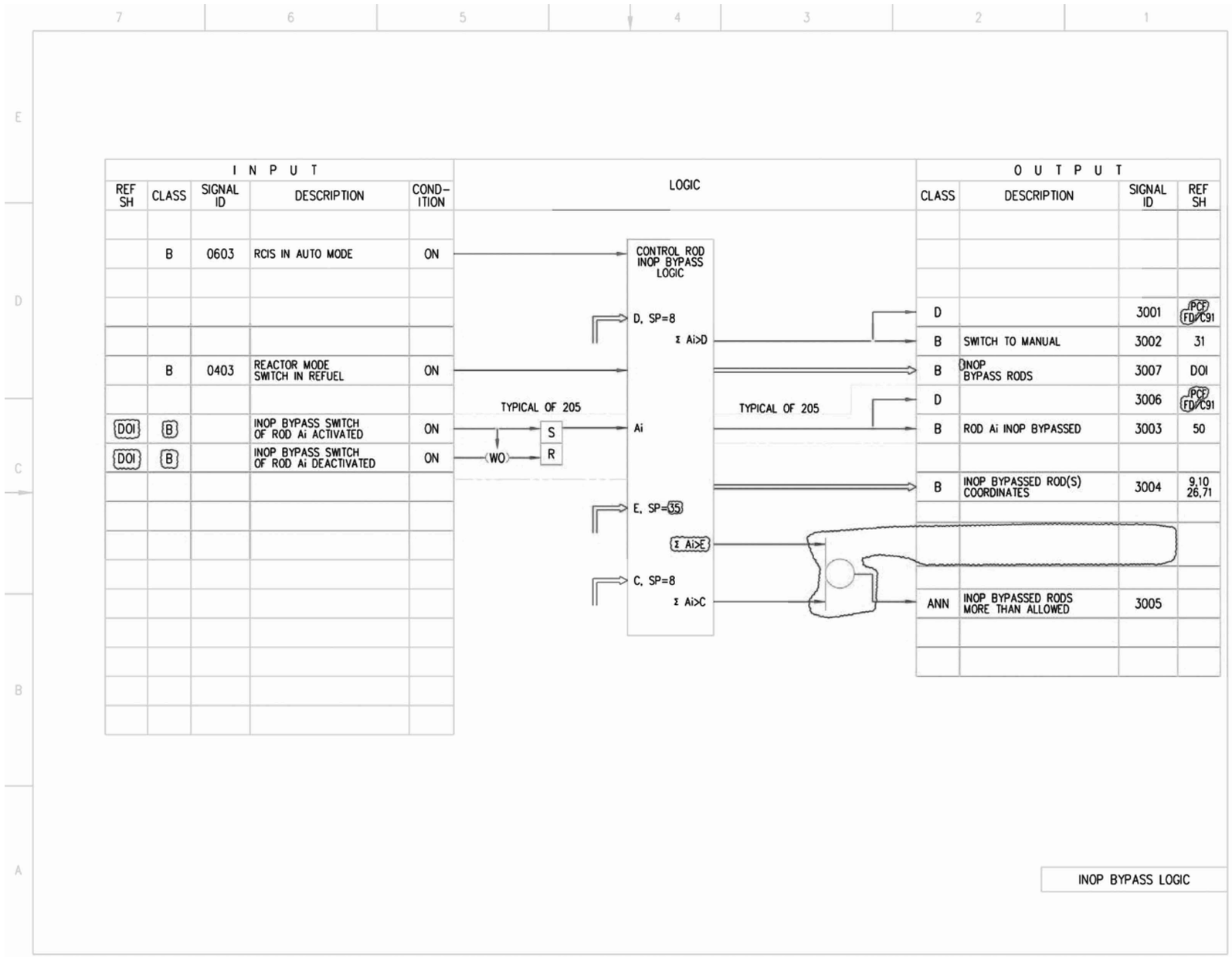

Figure 7.7-3 – Rod Control and Information System IBD (Sheet 30 of 87)

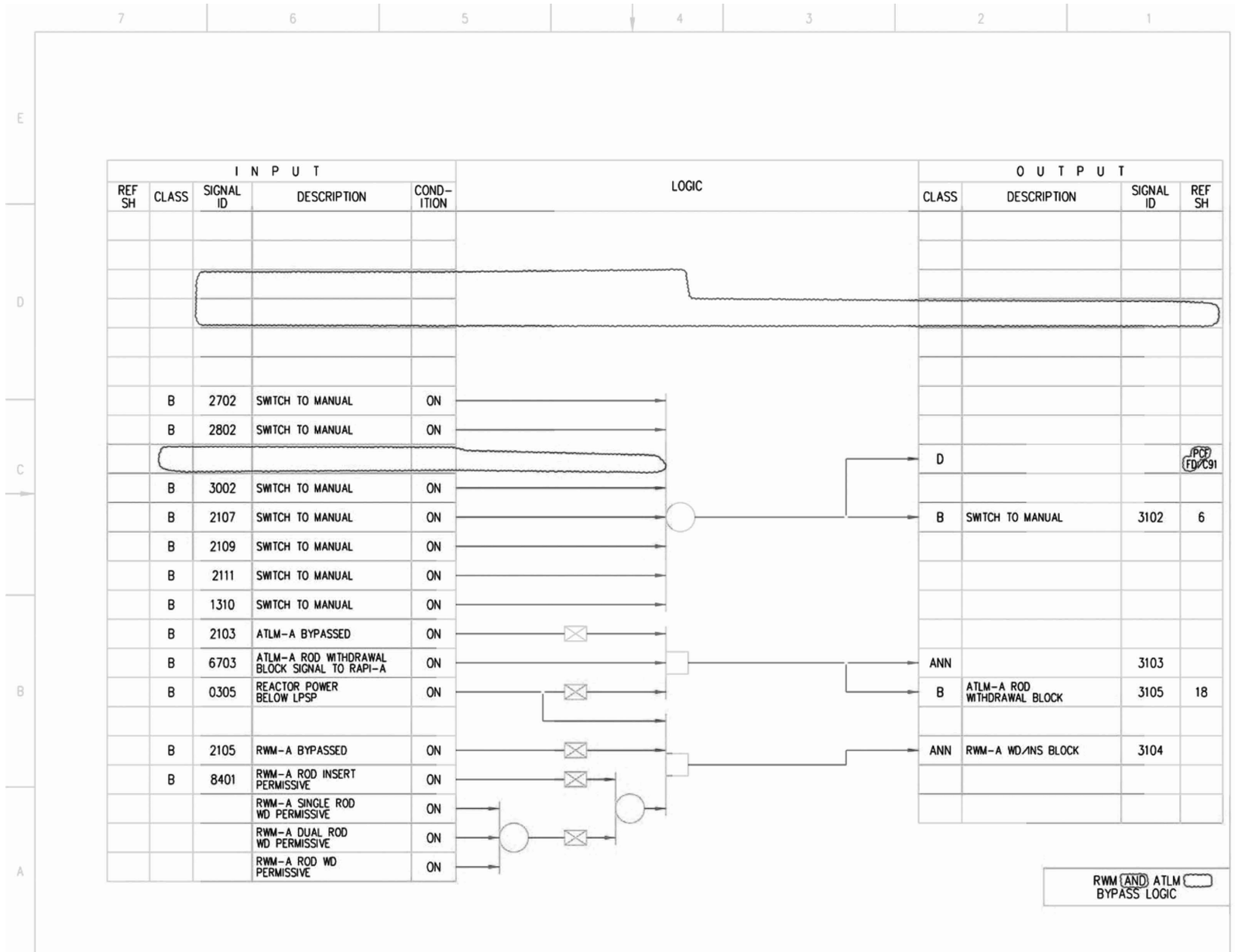

Figure 7.7-3 – Rod Control and Information System IBD (Sheet 31 of 87)

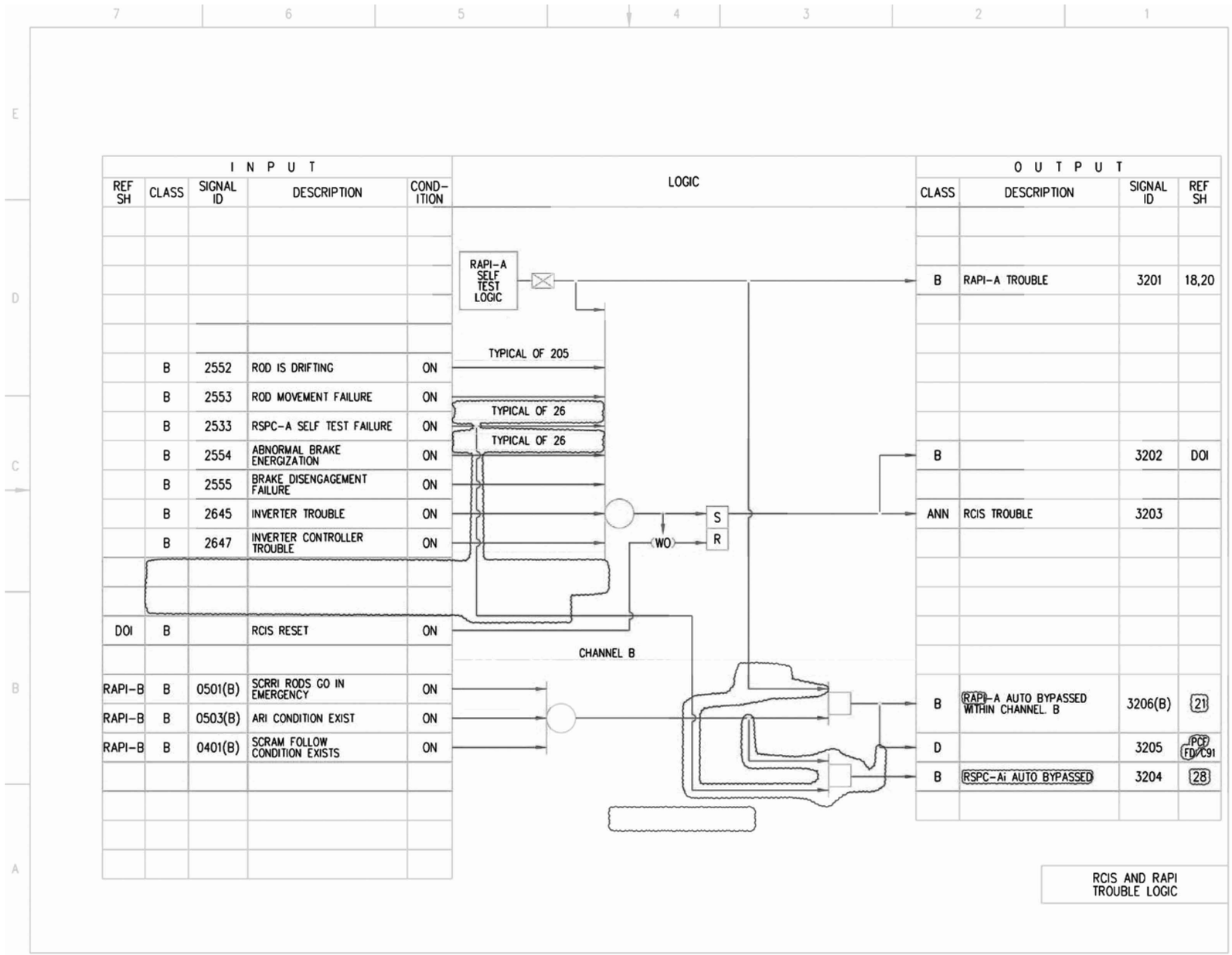

Figure 7.7-3 – Rod Control and Information System IBD (Sheet 32 of 87)

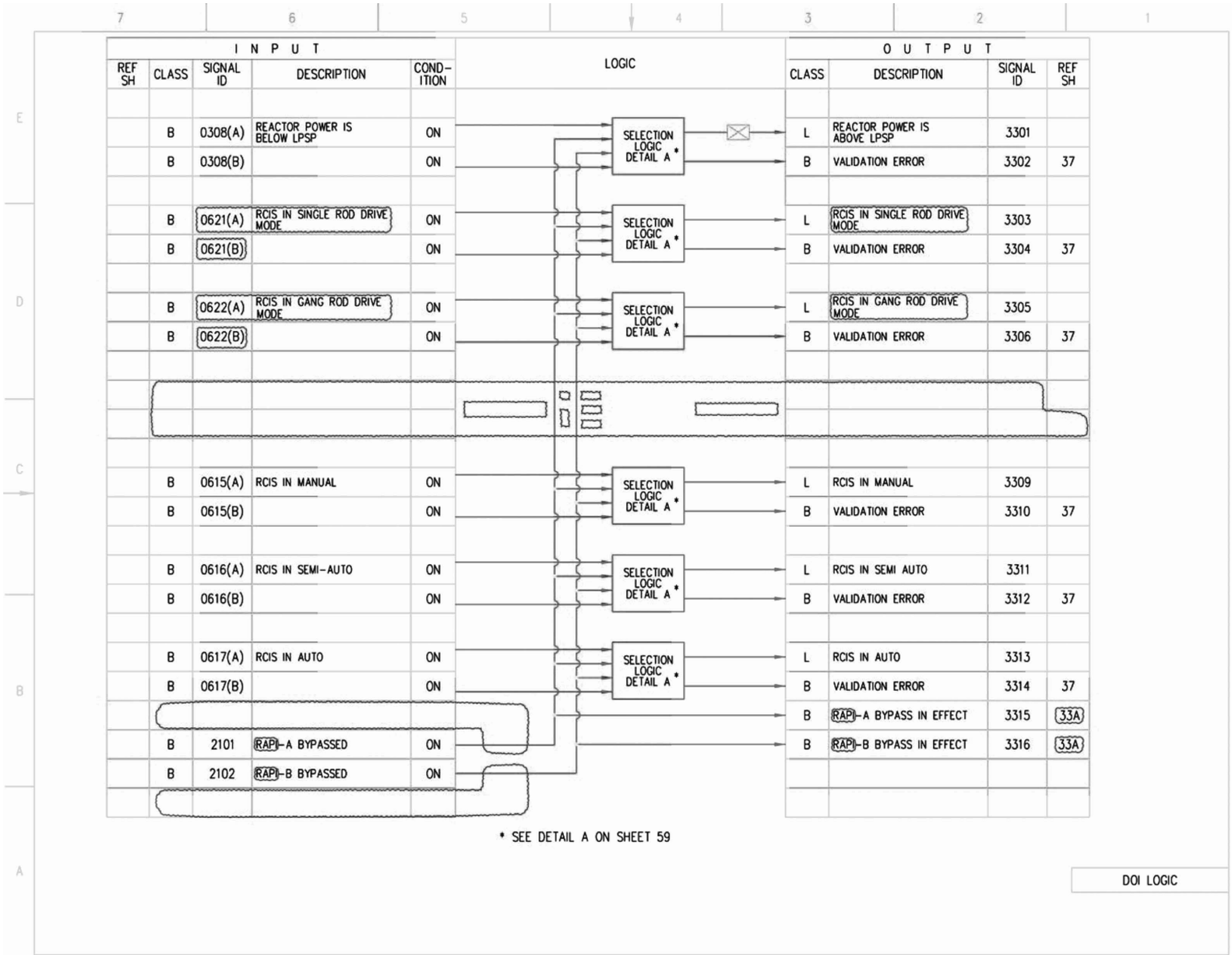

Figure 7.7-3 – Rod Control and Information System IBD (Sheet 33 of 87)

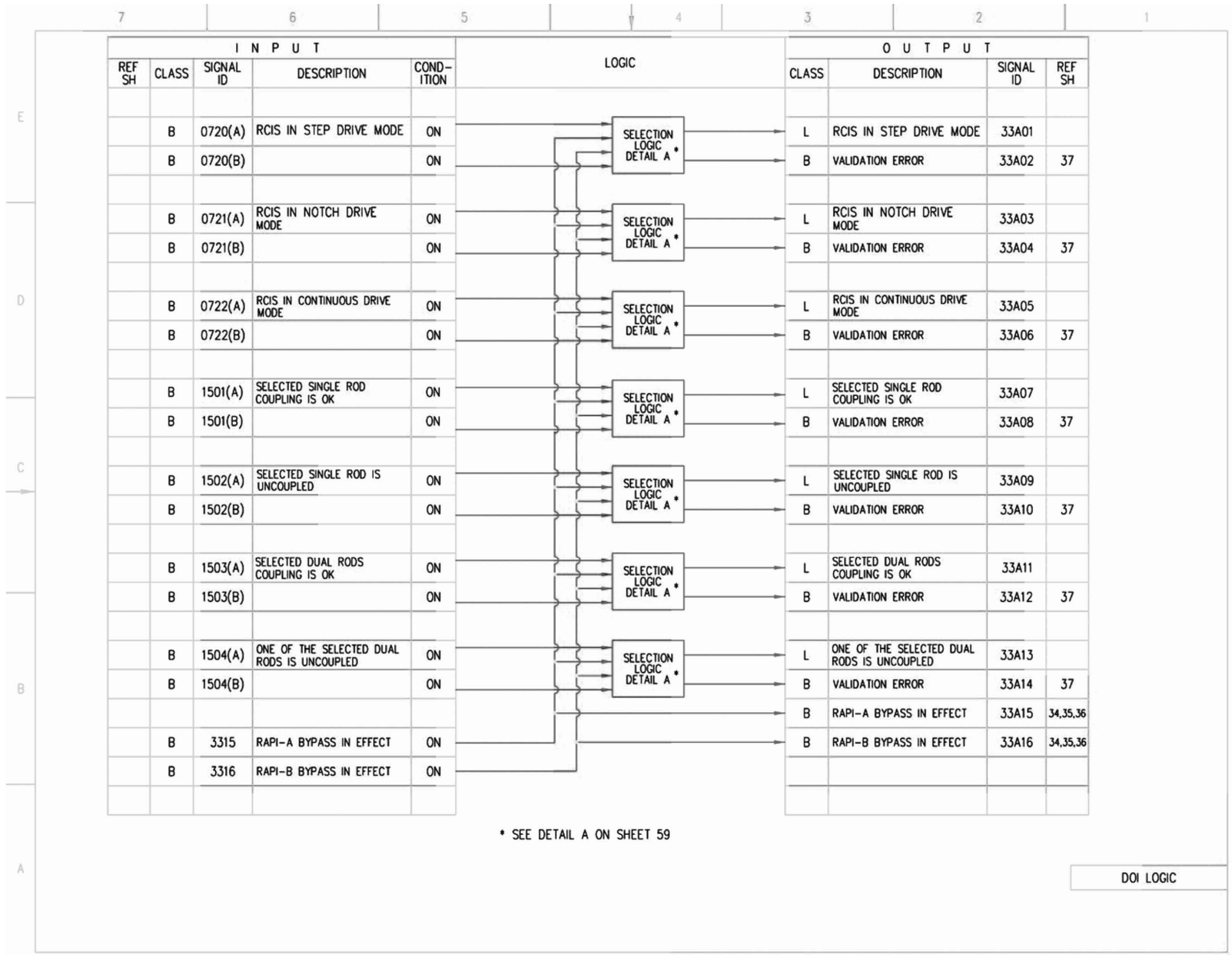

Figure 7.7-3 – Rod Control and Information System IBD (Sheet 33a of 87)

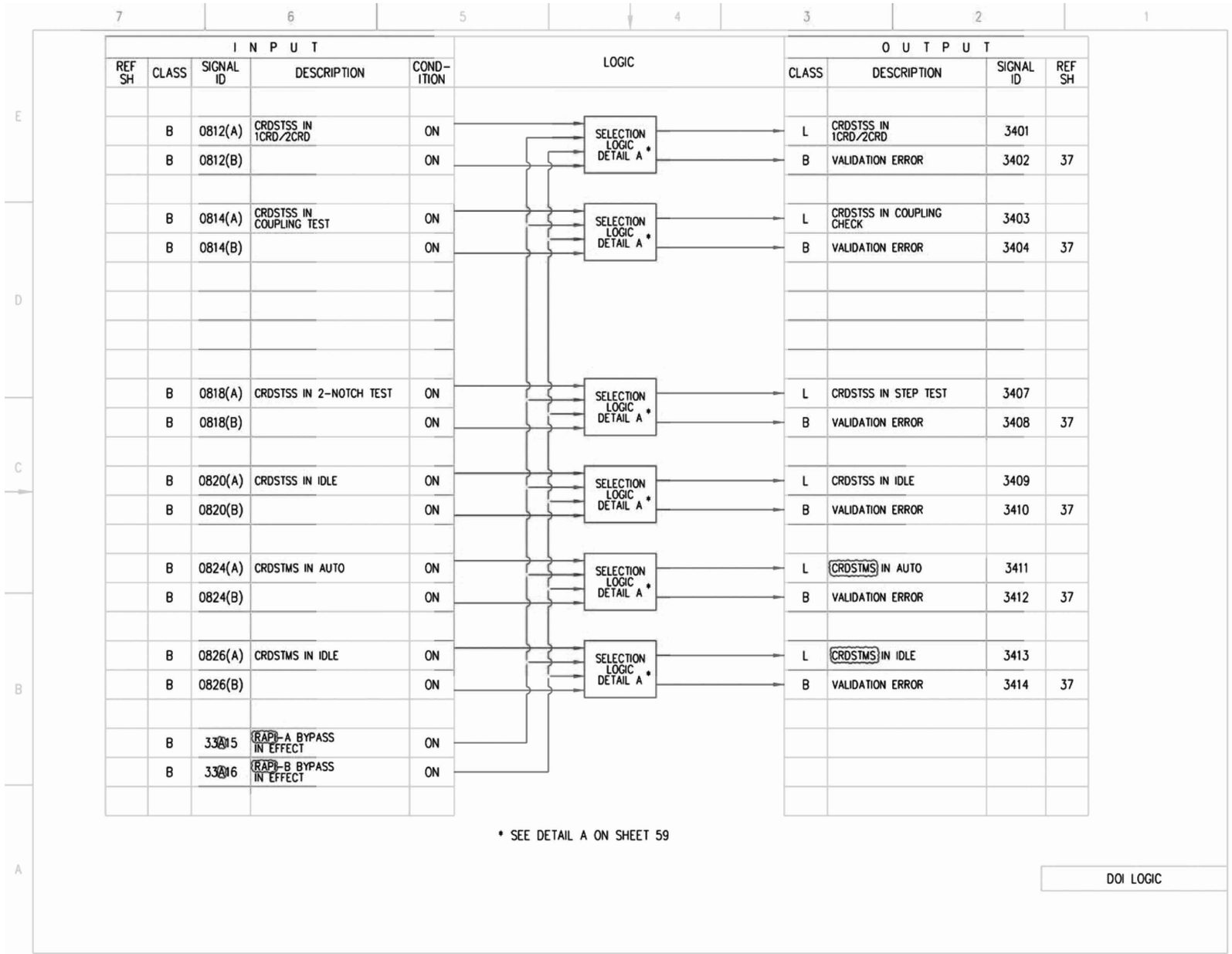

Figure 7.7-3 – Rod Control and Information System IBD (Sheet 34 of 87)

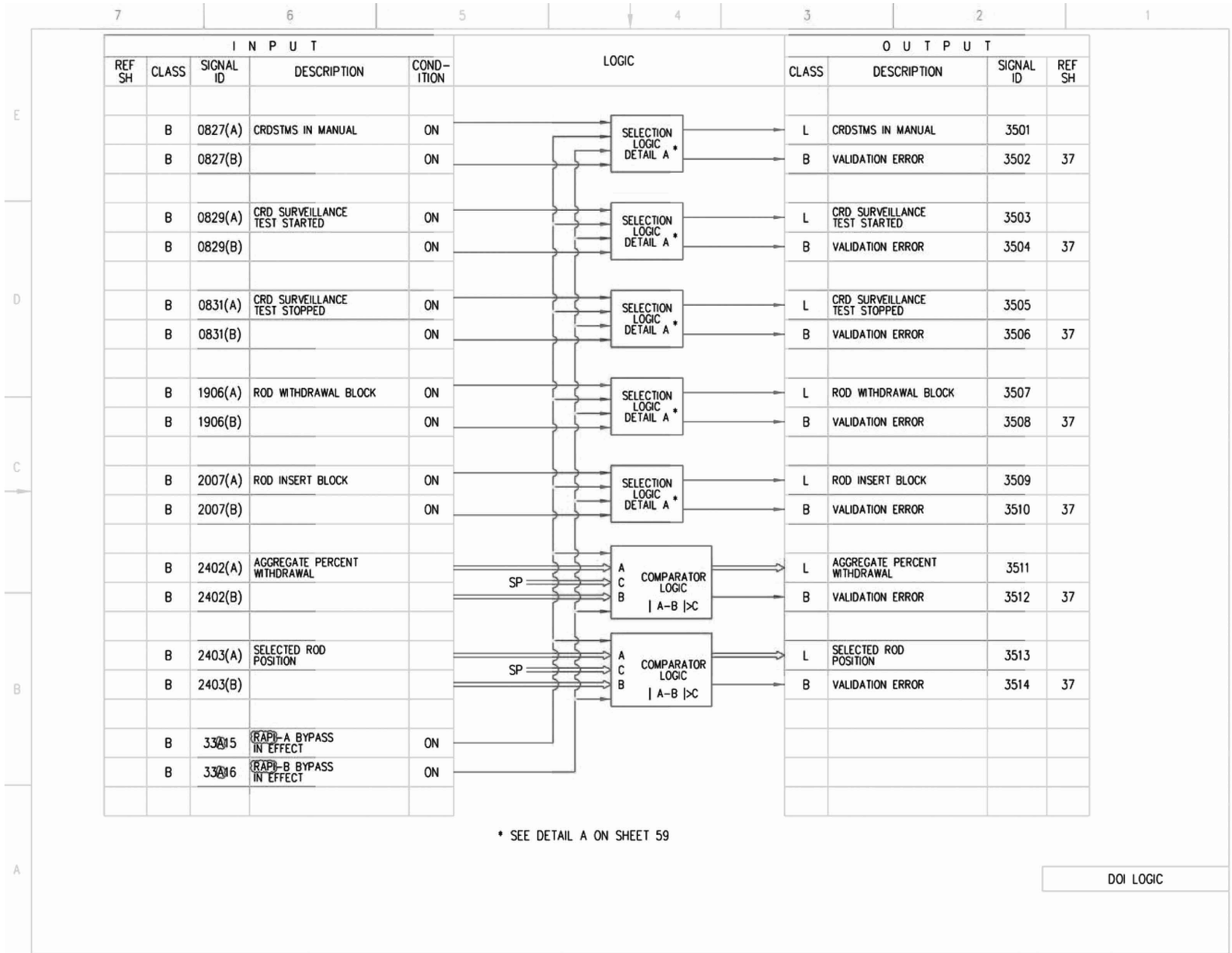

Figure 7.7-3 – Rod Control and Information System IBD (Sheet 35 of 87)

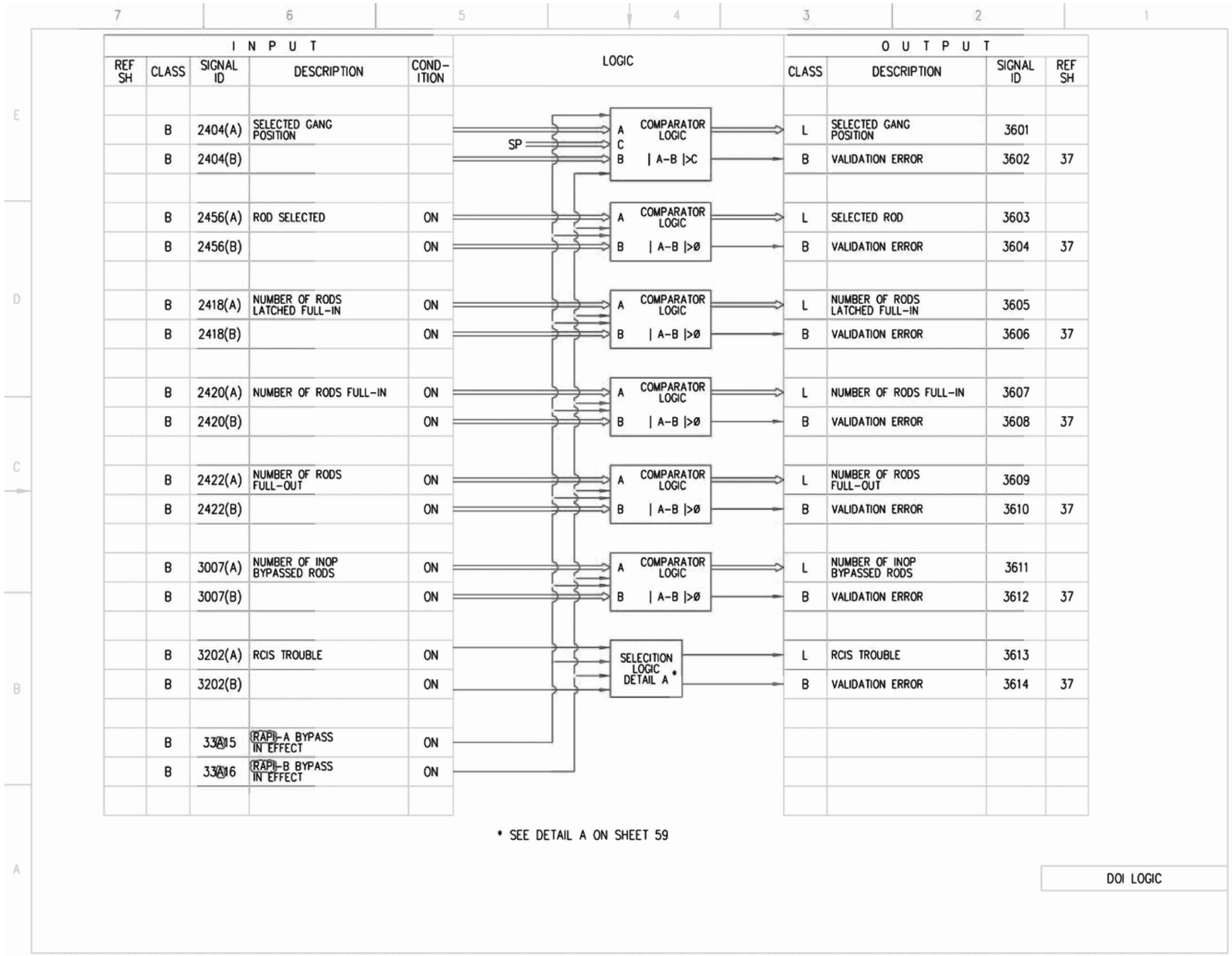

Figure 7.7-3 – Rod Control and Information System IBD (Sheet 36 of 87)

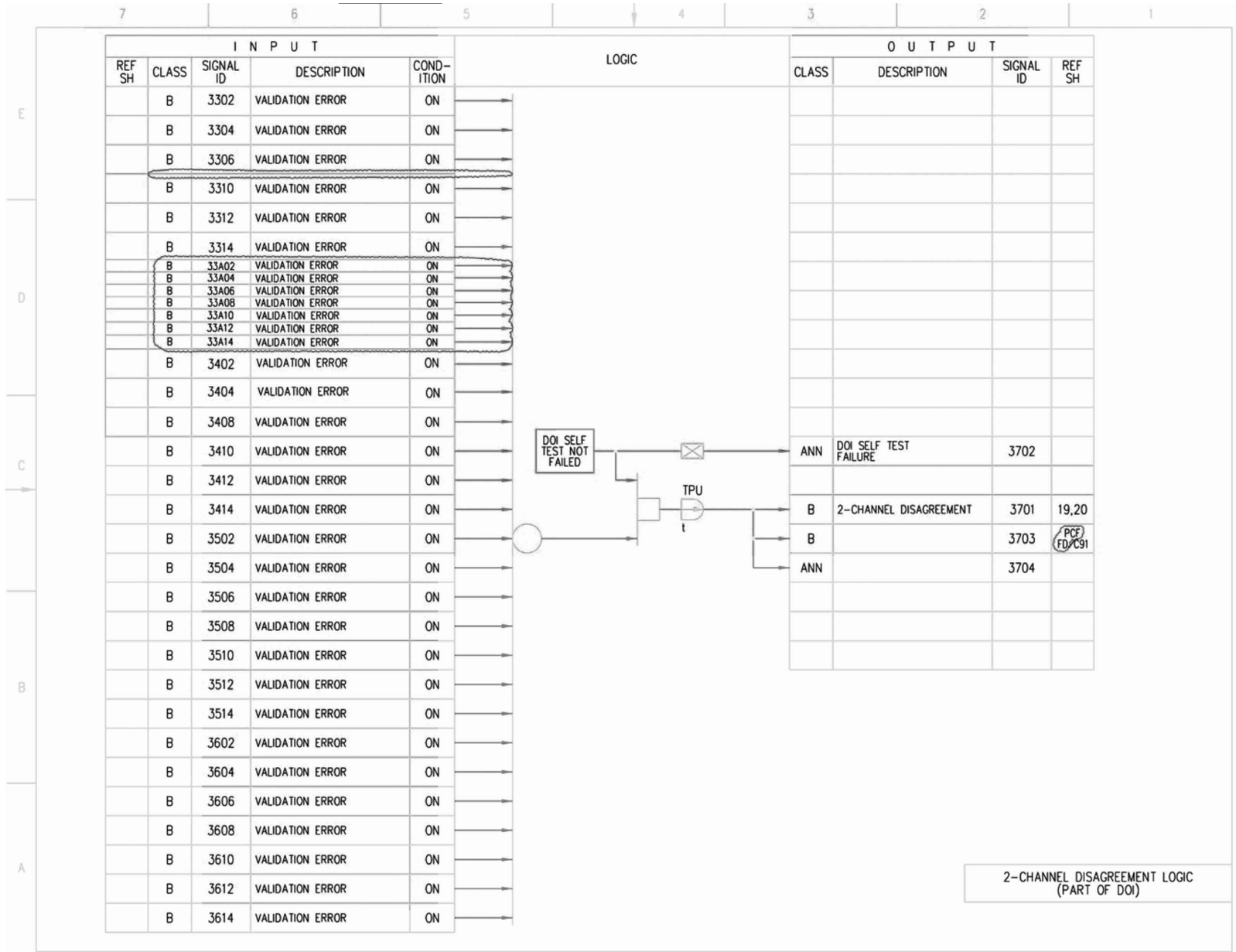

Figure 7.7-3 – Rod Control and Information System IBD (Sheet 37 of 87)

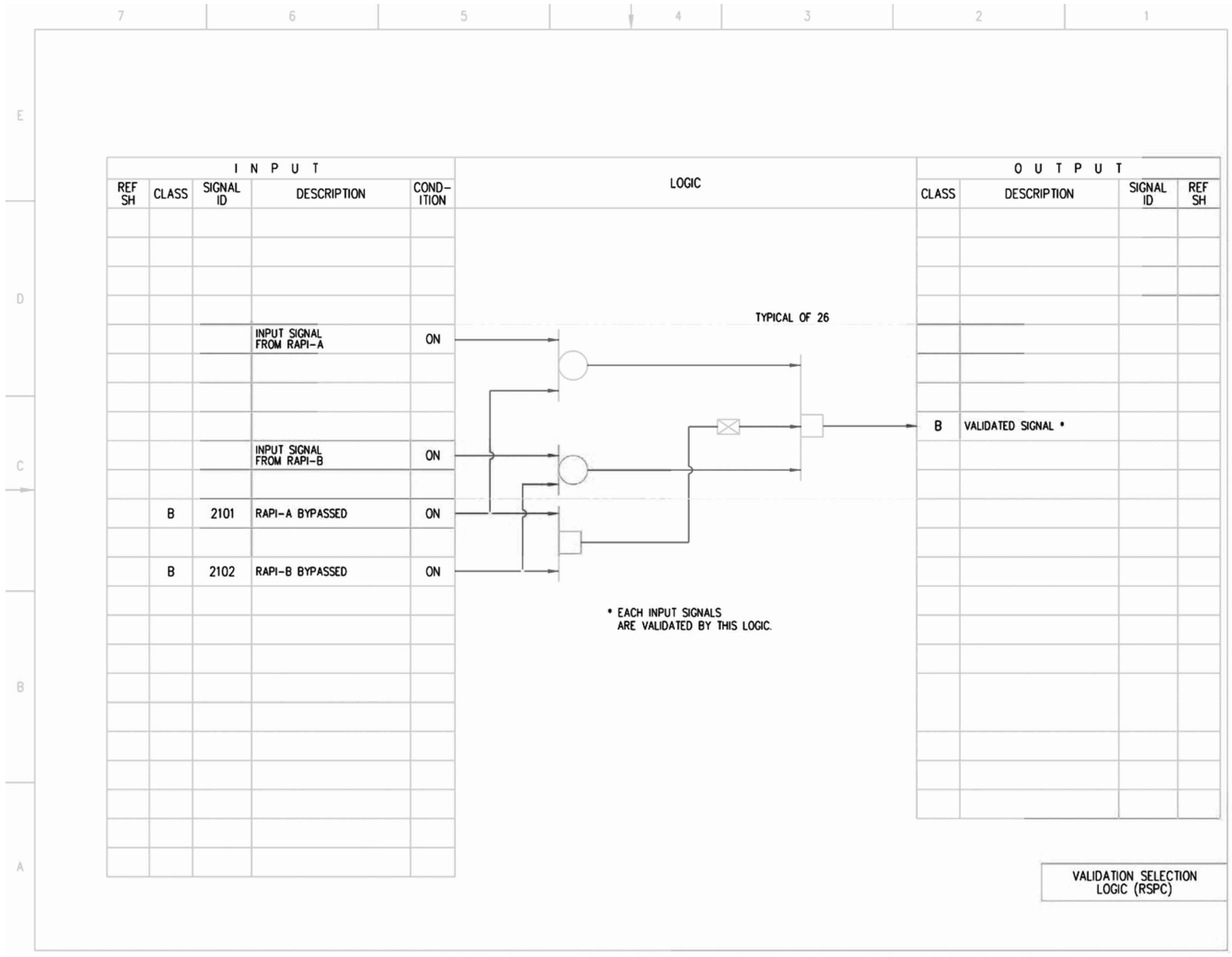

Figure 7.7-3 – Rod Control and Information System IBD (Sheet 37a of 87)