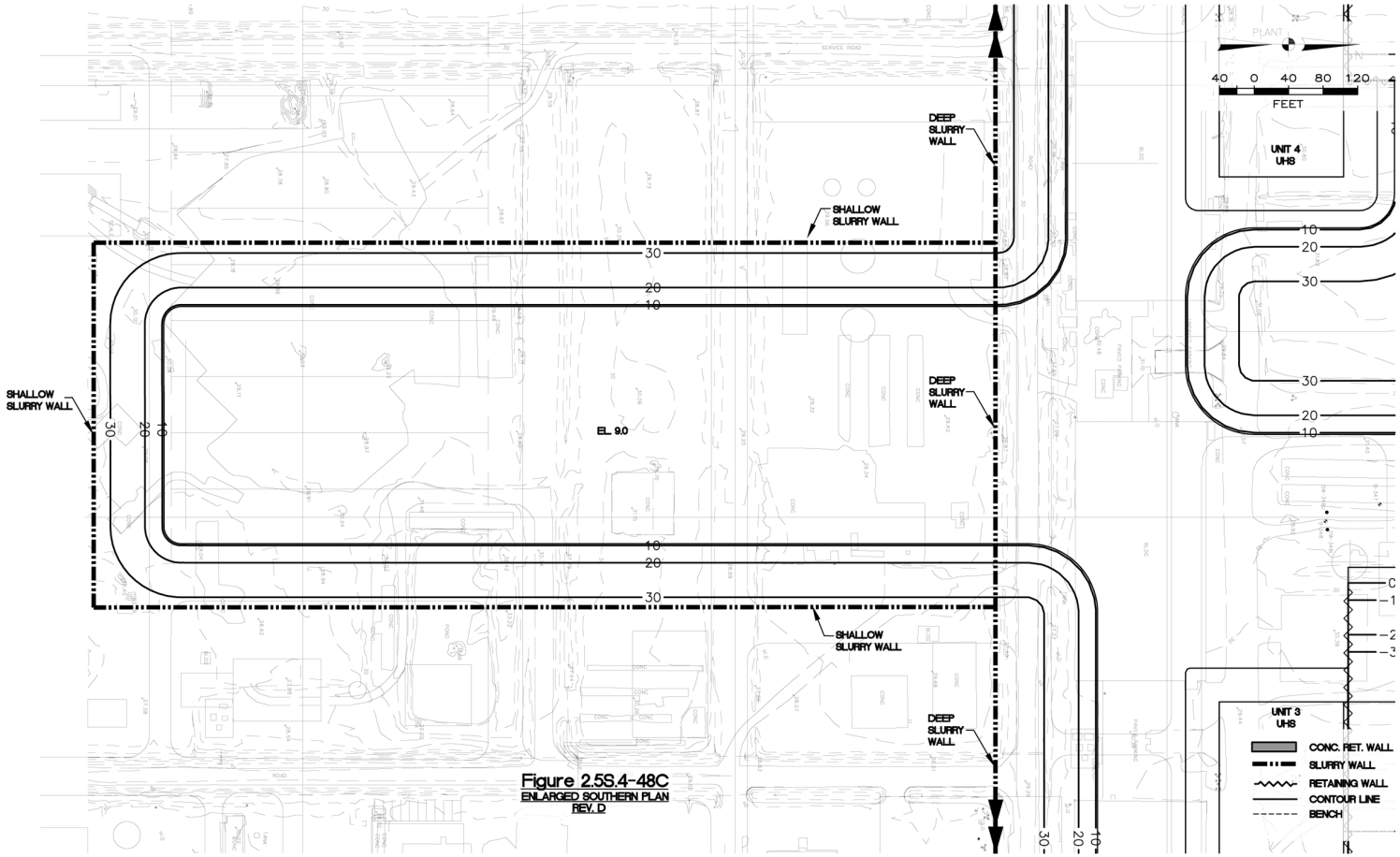

Figure 2.5S.4-48C Enlarged Southern Plan Rev. D

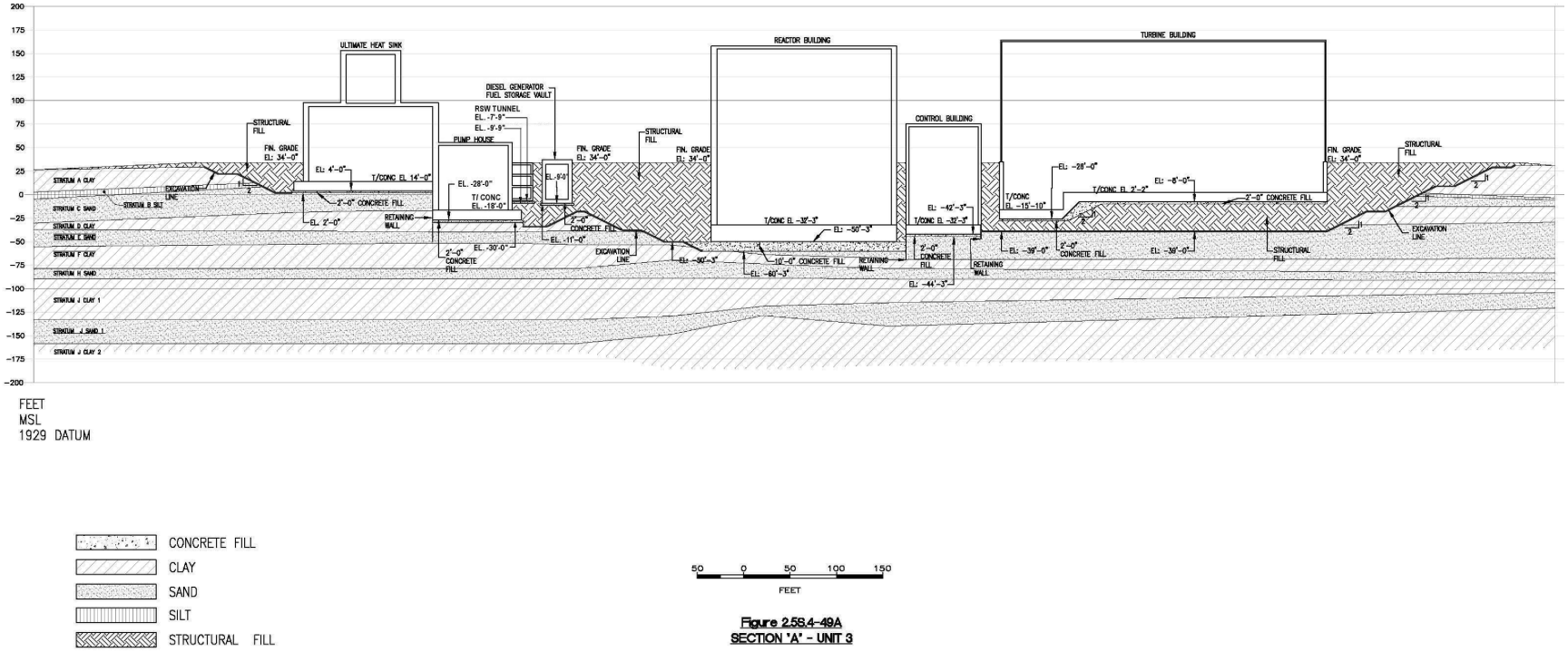

Figure 2.5S.4-49A
SECTION "A" - UNIT 3

Figure 2.5S.4-49A Section "A" - Unit 3 Rev. D

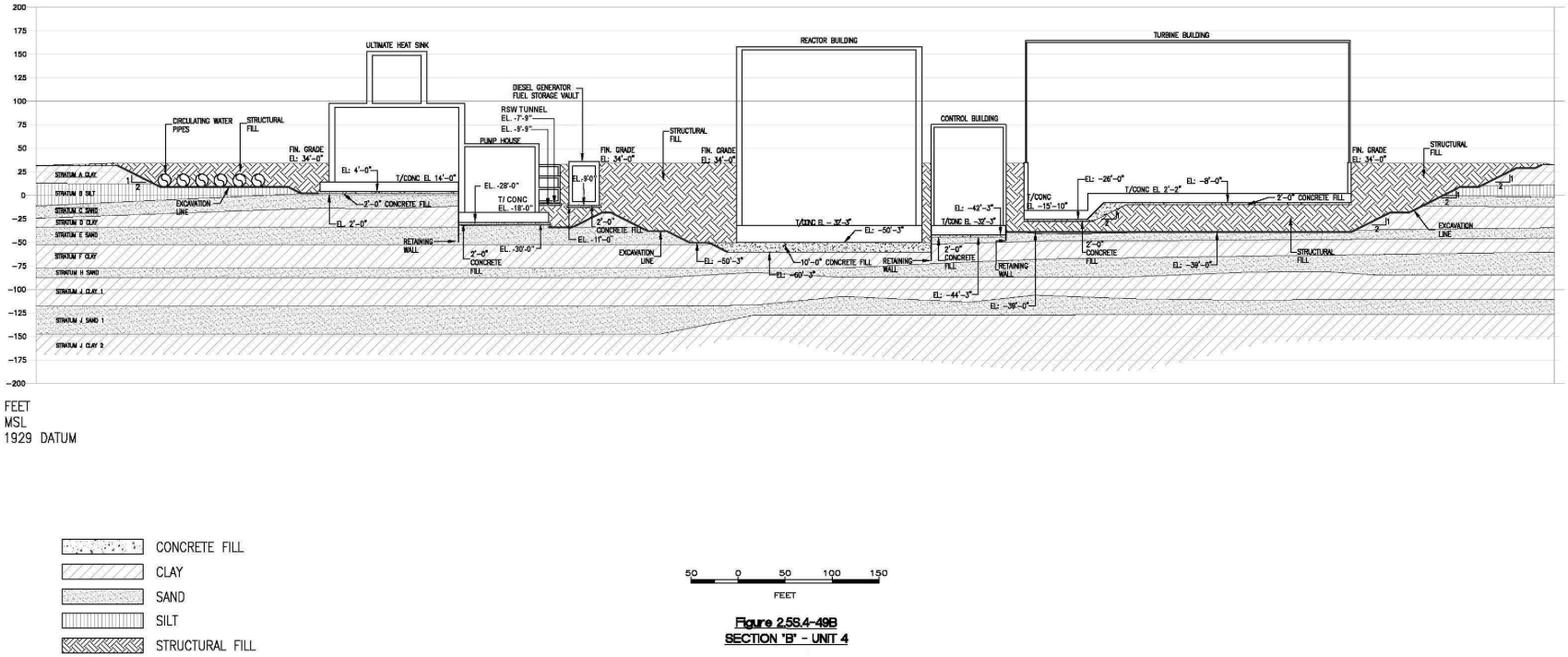

Figure 2.5S.4-49B
SECTION "B" - UNIT 4

Figure 2.5S.4-49B Section "B" - Unit 4 Rev. D

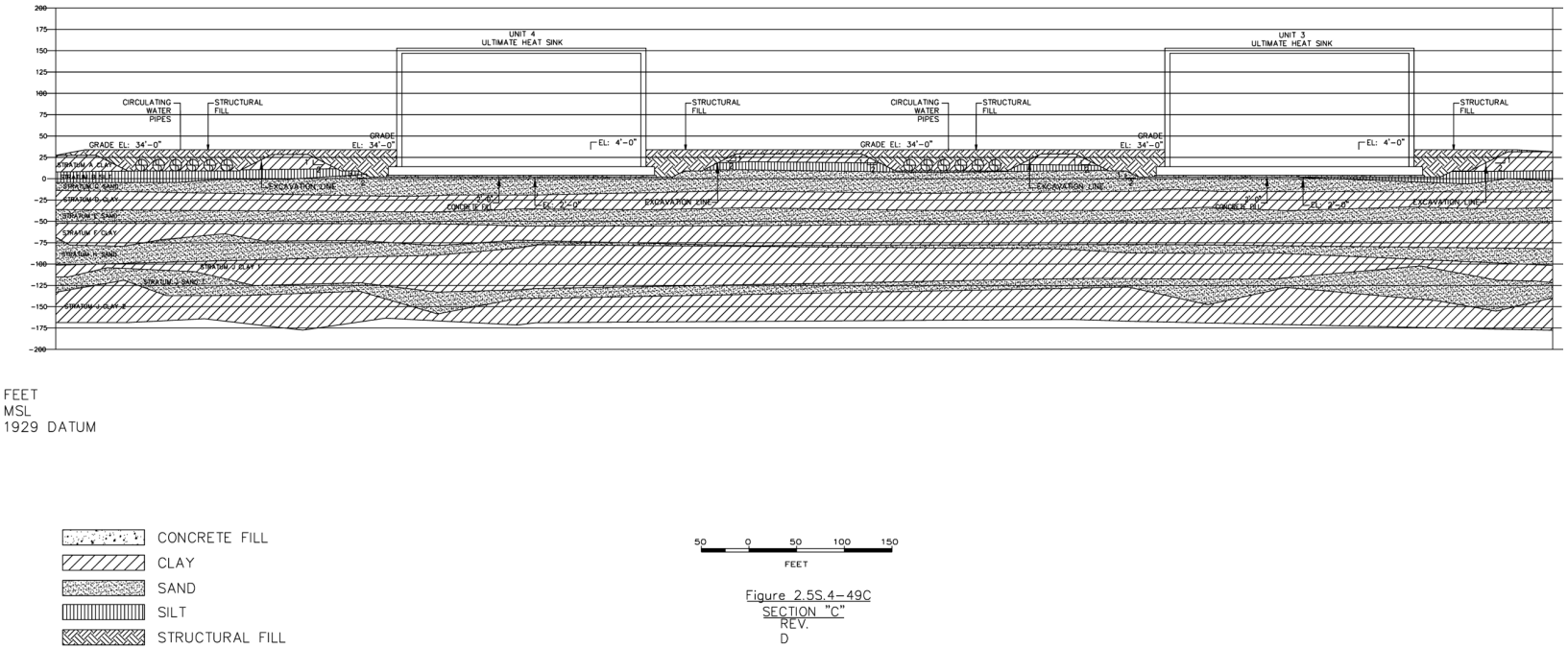

Figure 2.5S.4-49C
SECTION "C"
REV.
D

Figure 2.5S.4-49C Section "C" Rev. D

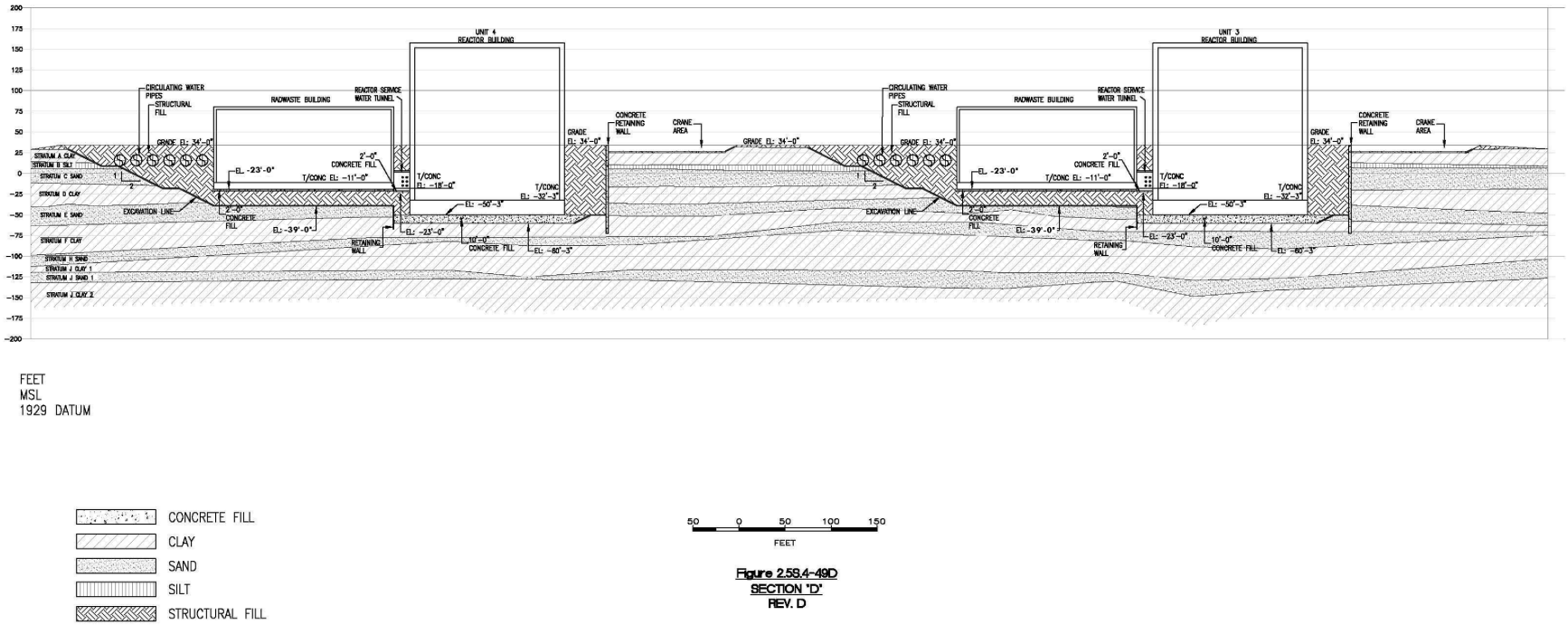

Figure 2.5S.4-49D
SECTION "D"
REV. D

Figure 2.5S.4-49D Section "D" Rev. D

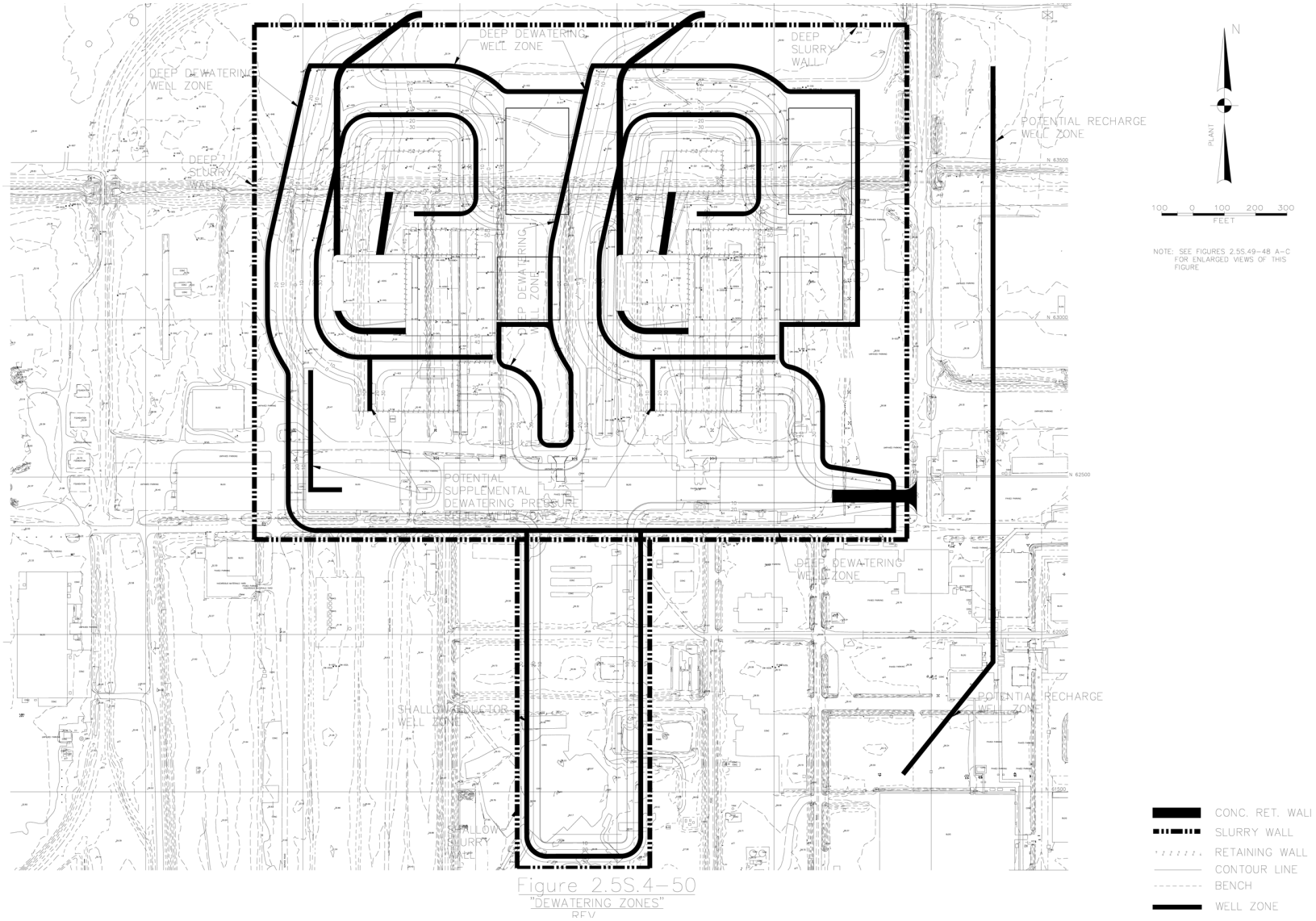

Figure 2.5S.4-50
"DEWATERING ZONES"
REV.

Figure 2.5S.4-50 Dewatering Zones Rev. C

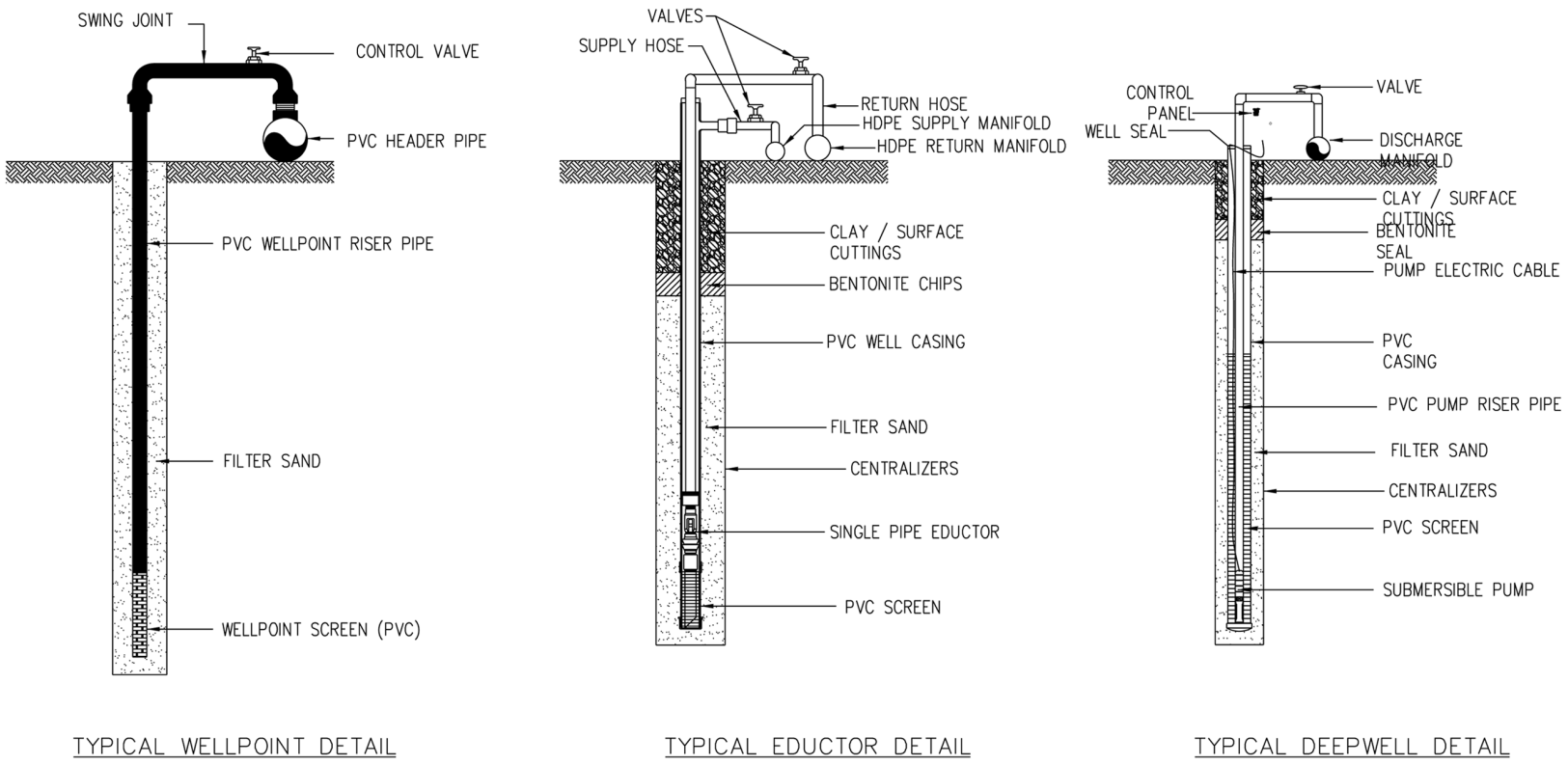

Figure 2.5S.4-51 Dewatering Detail Rev. B

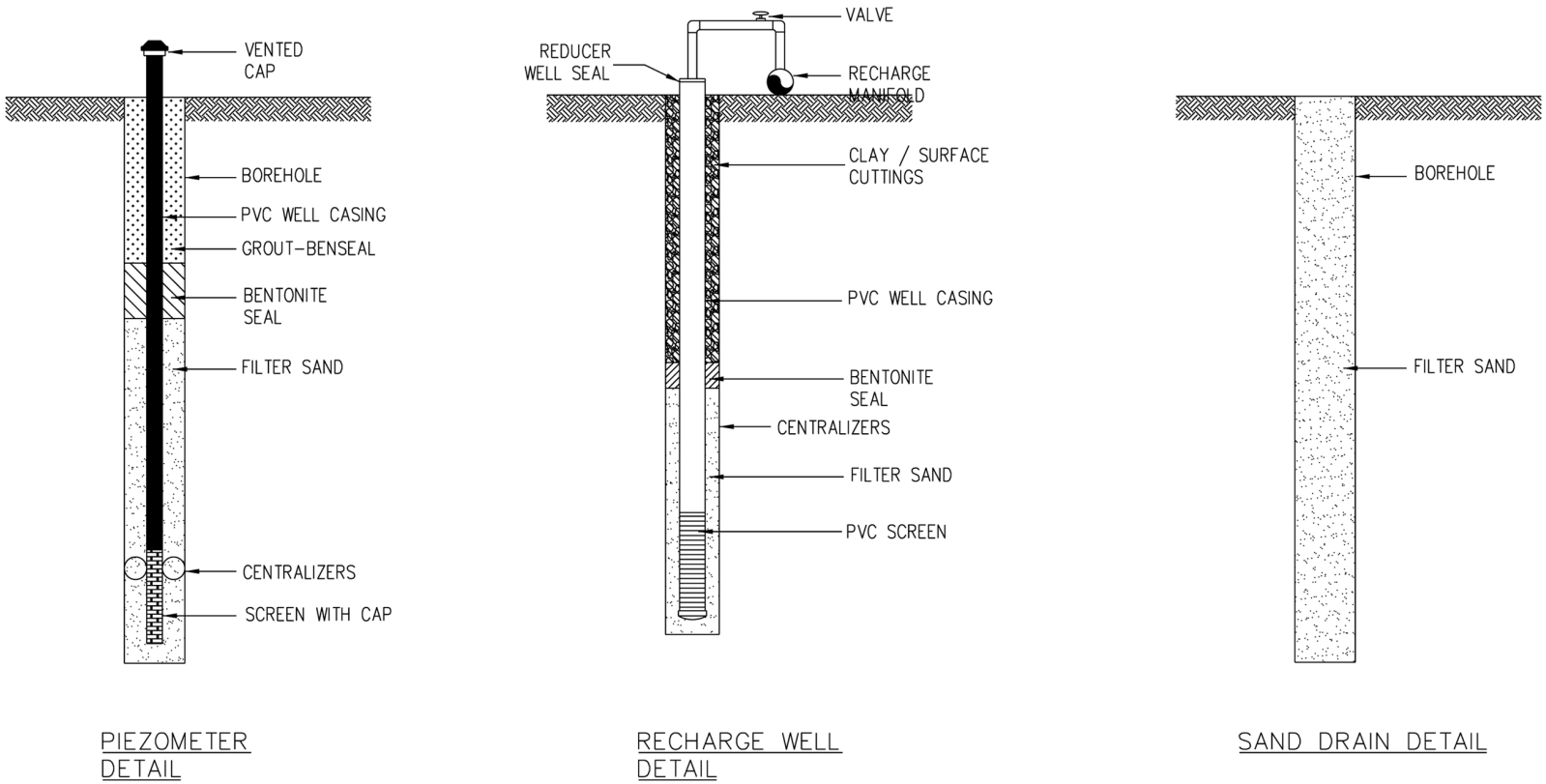

Figure 2.5S.4-52 Dewatering Detail Rev. B

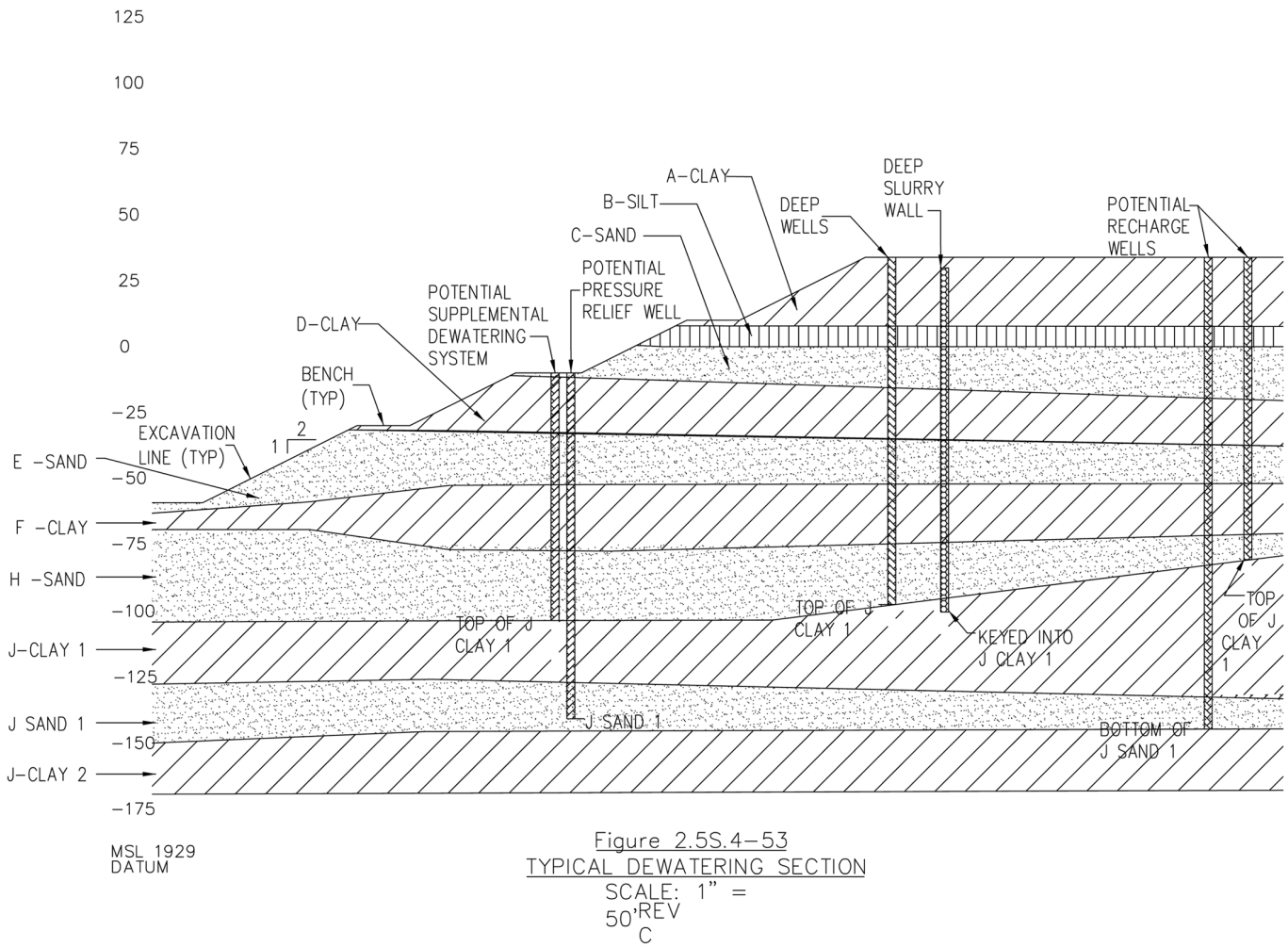

Figure 2.5S.4-53 Typical Dewatering Section

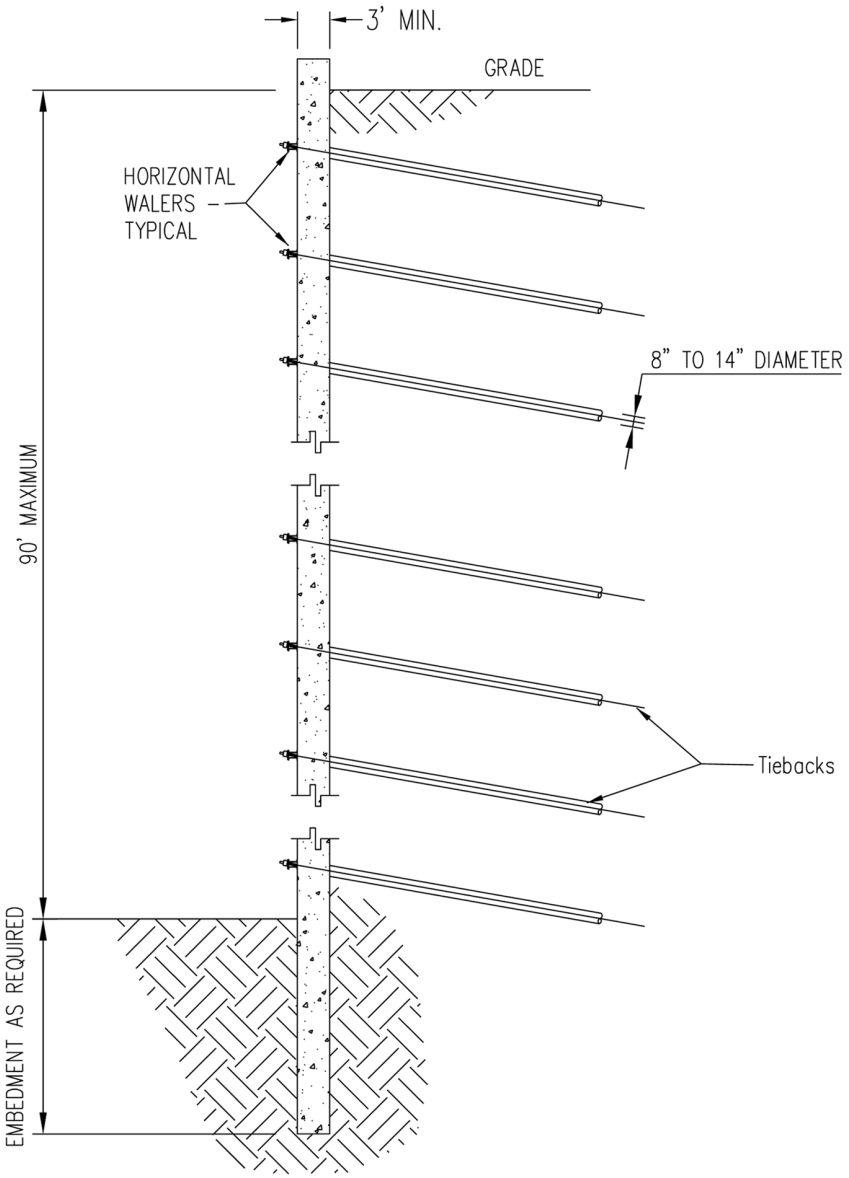

Figure 2.5S.4-54 Reinforced Concrete Retaing Wall Section Rev. C

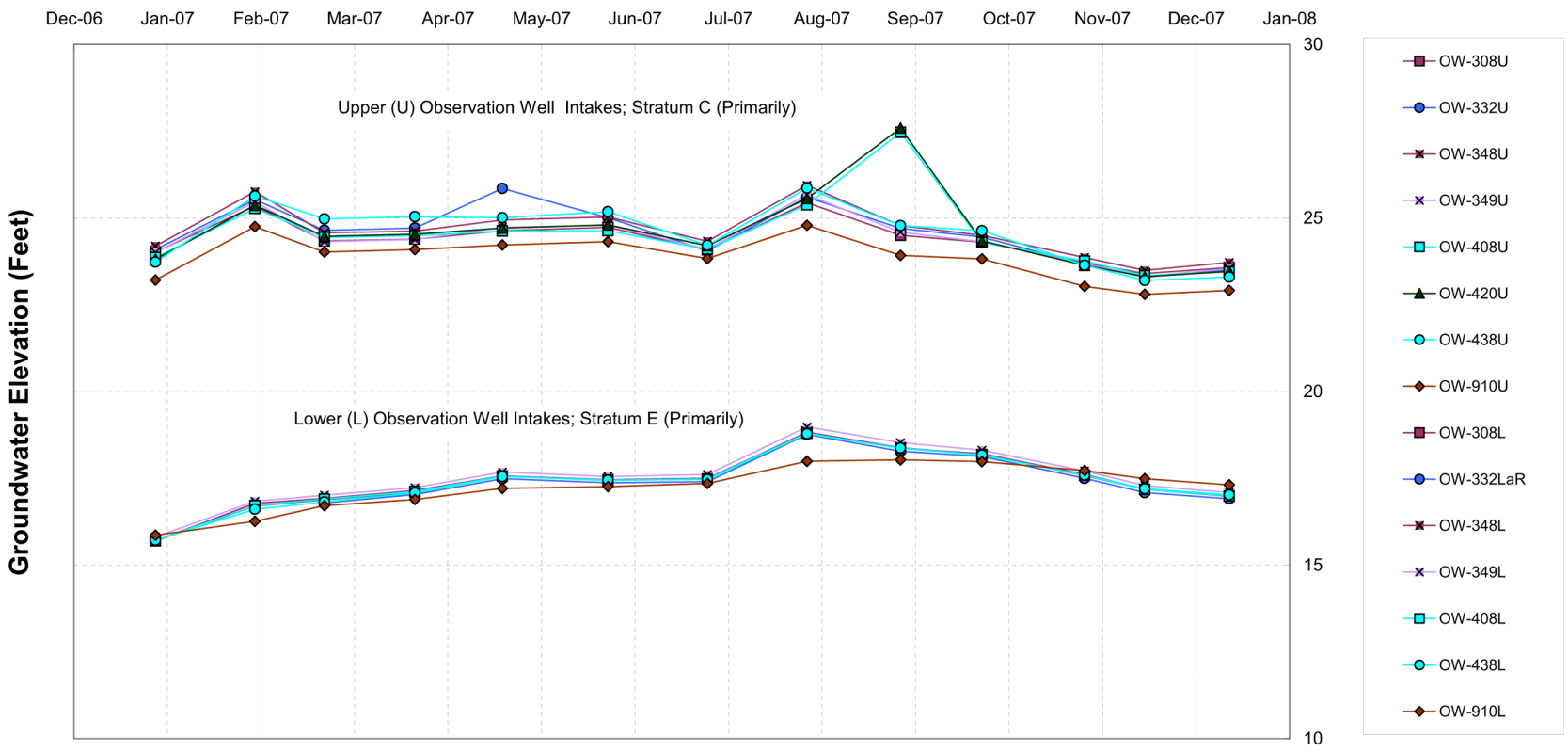

Figure 2.5S.4-55 Measured Groundwater Levels (Inside Power Block)

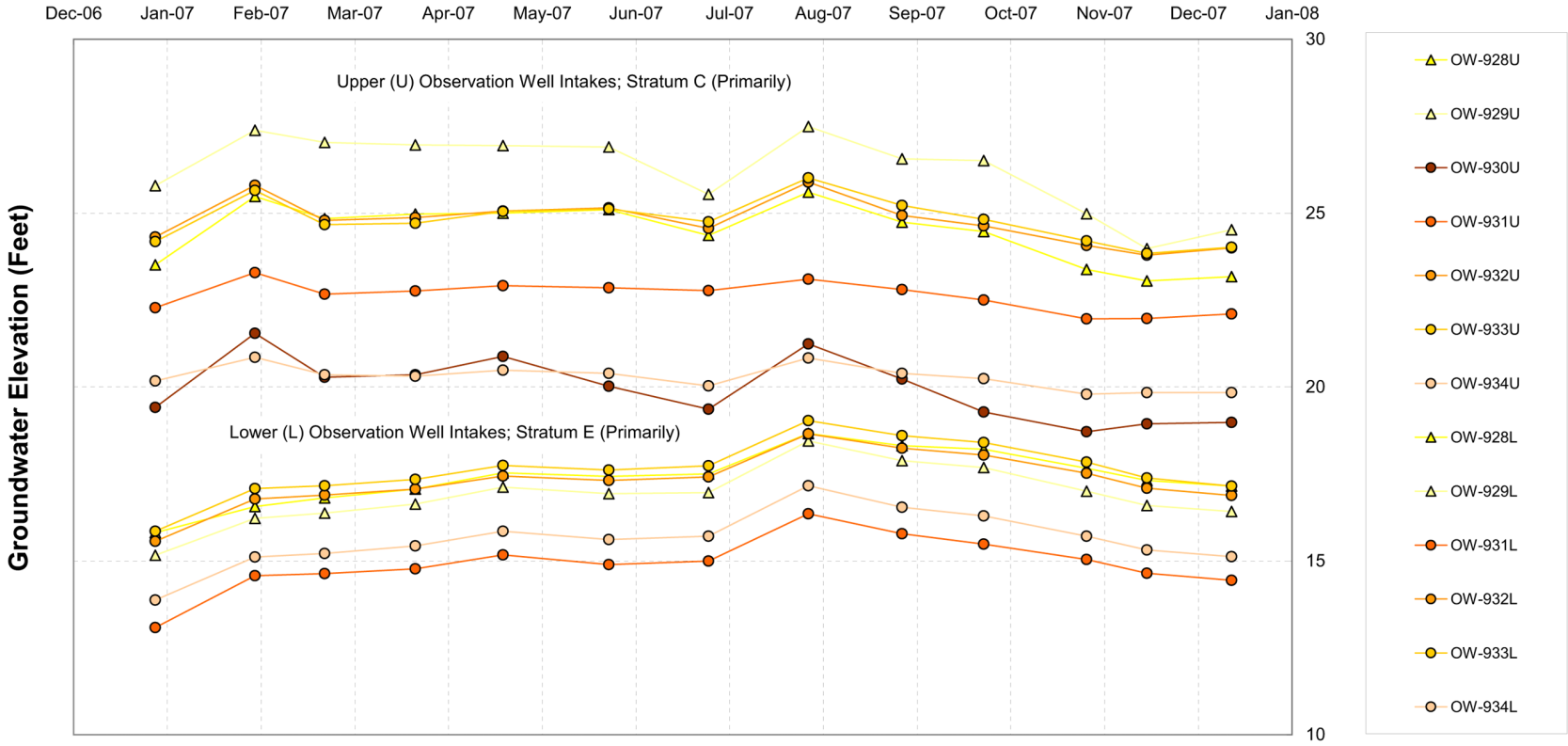

Figure 2.5S.4-56 Measured Groundwater Levels (Outside Power Block)

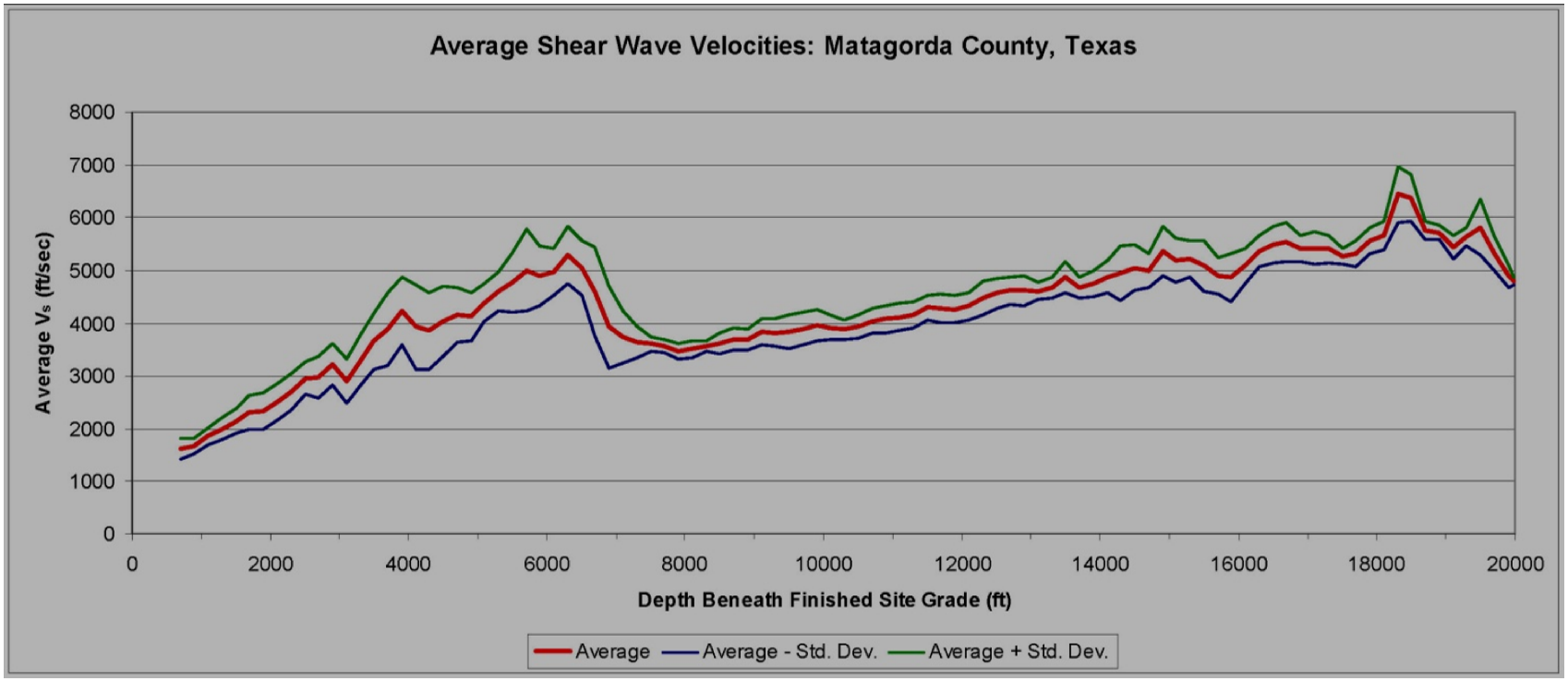

Figure 2.5S.4-57 Deep Shear Wave Velocity Profile for the STP Site

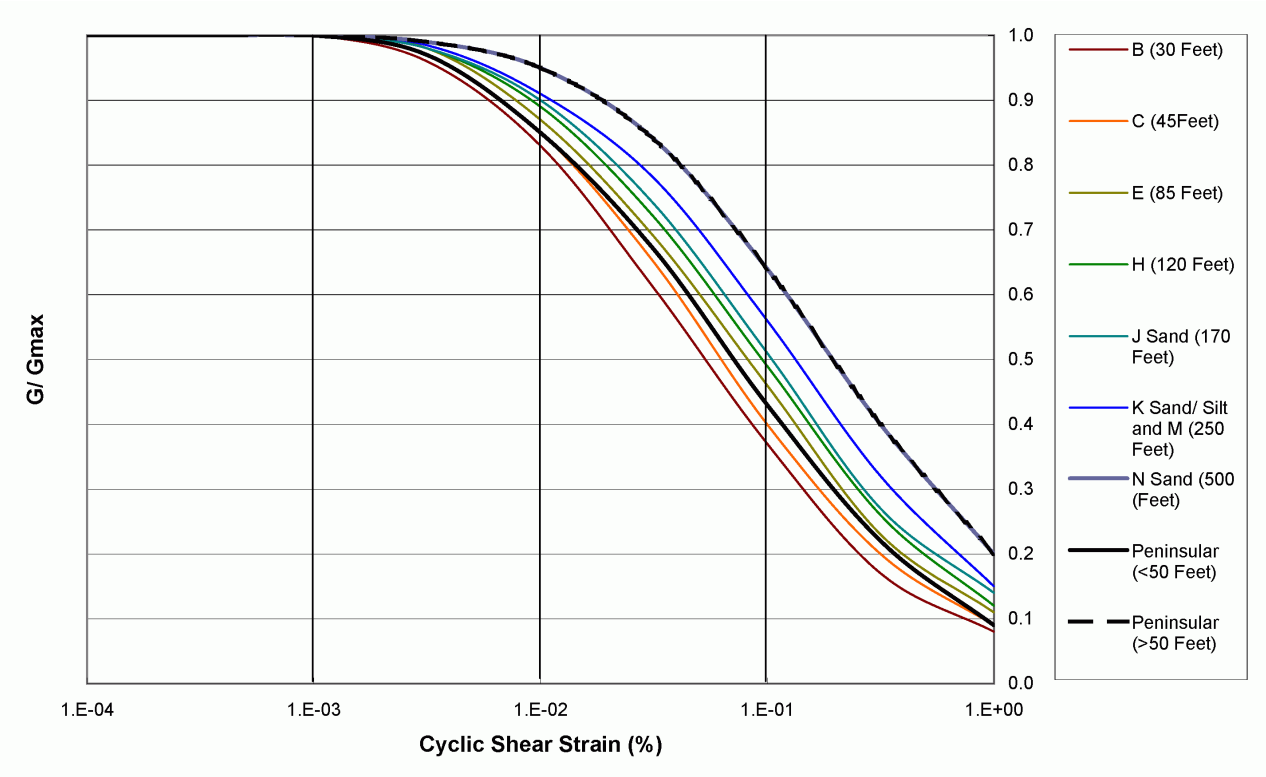

Figure 2.5S.4-58 Selected Shear Modulus Degradation Curves for Cohesionless Soil Strata

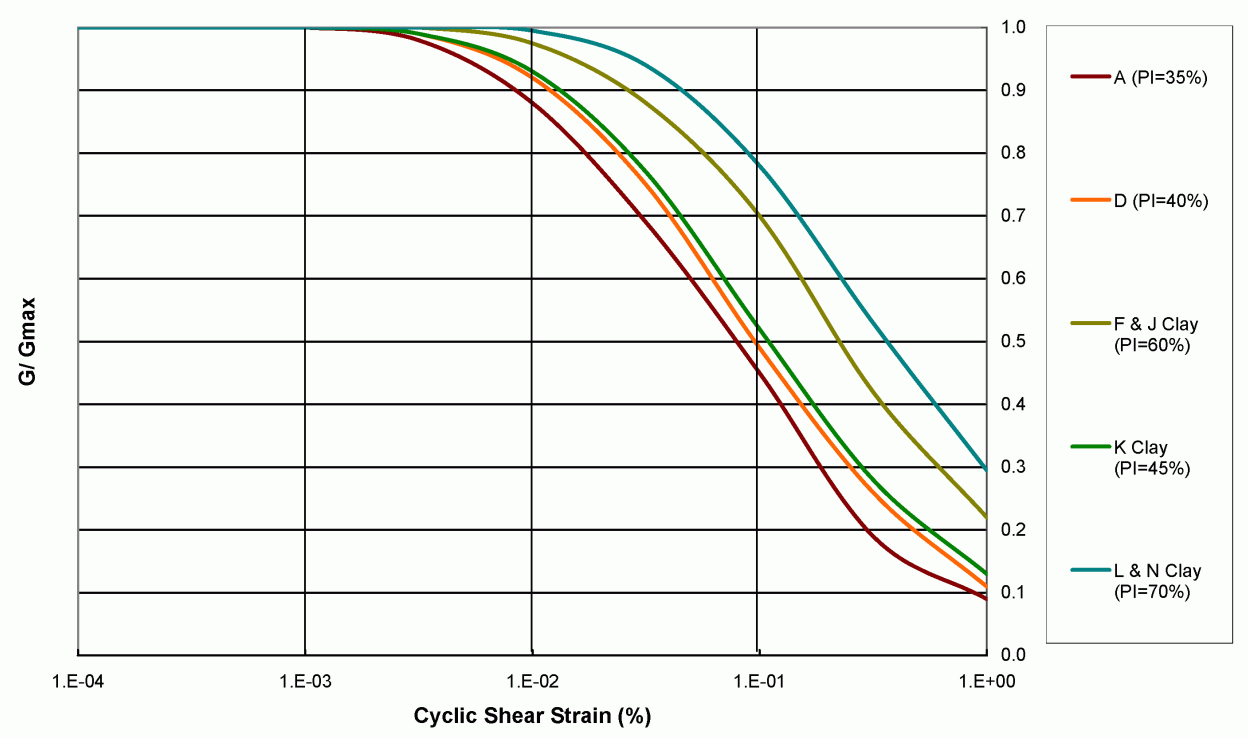

Figure 2.5S.4-59 Selected Shear Modulus Degradation Curves for Cohesive Soil Strata

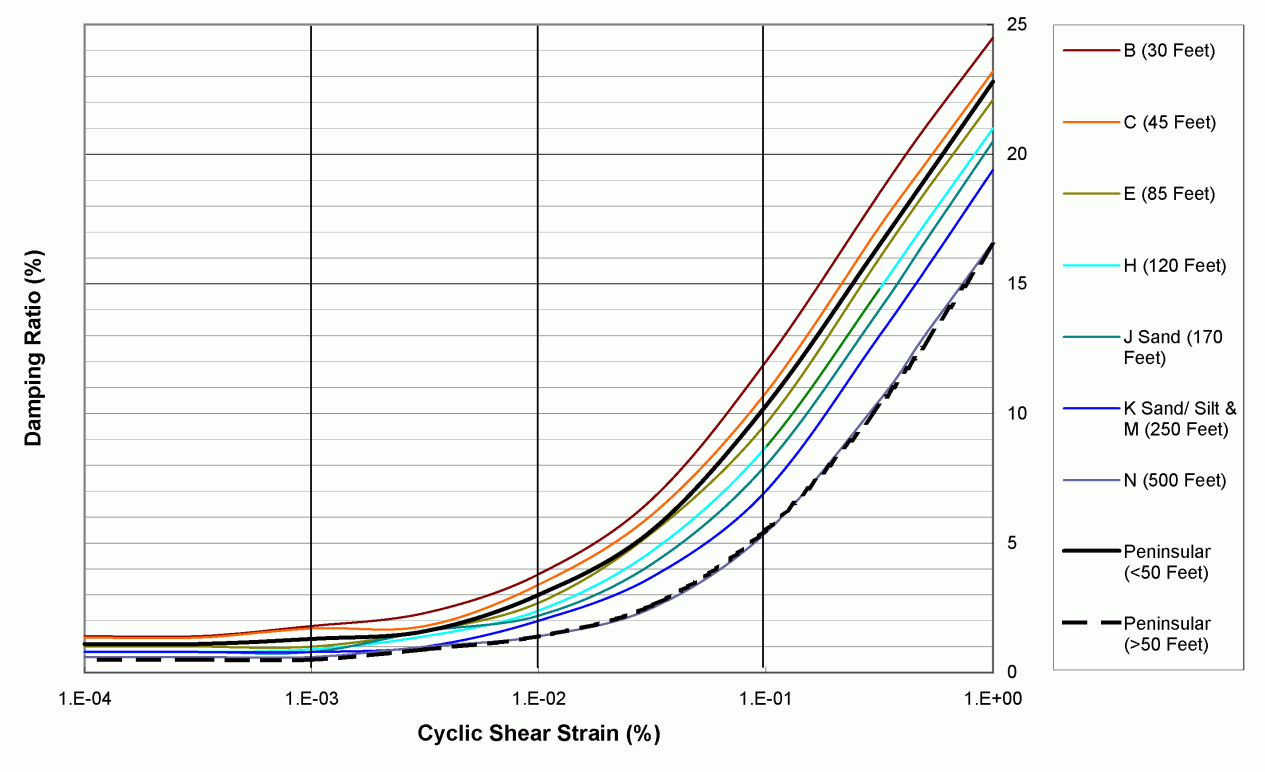

Figure 2.5S.4-60 Selected Damping Ratio Curves for Cohesionless Soil Strata

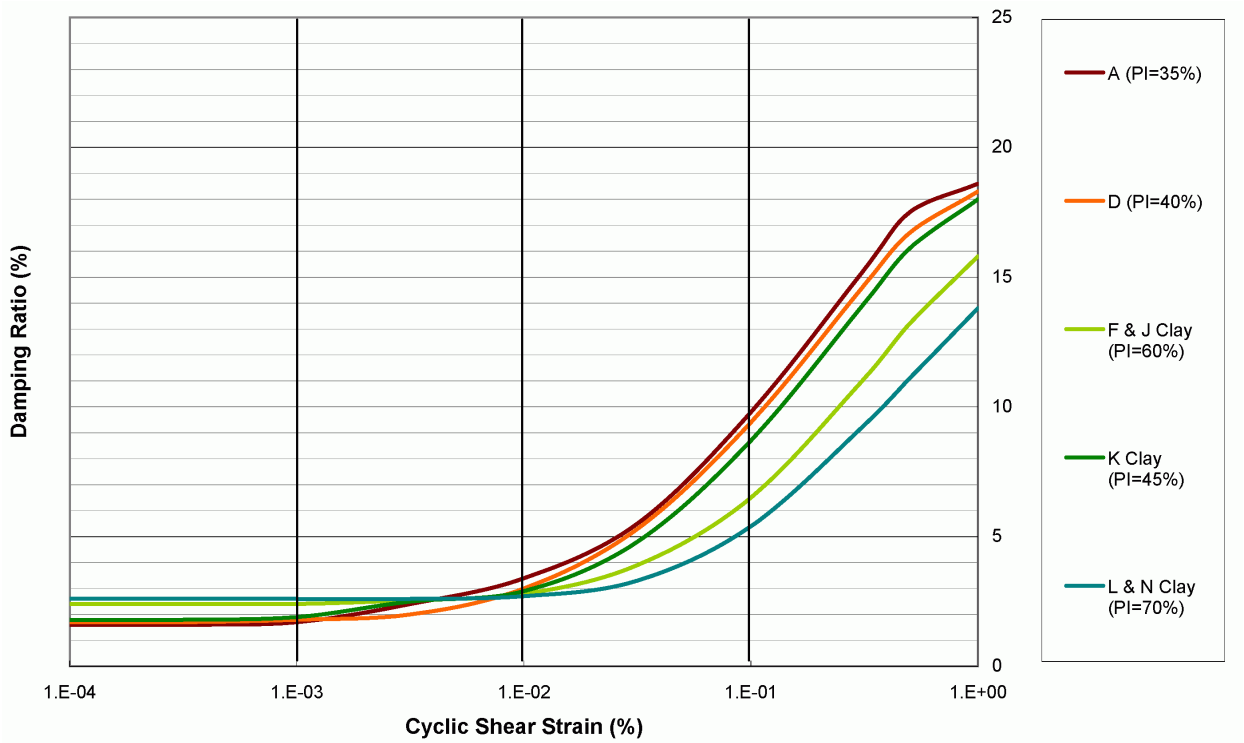

Figure 2.5S.4-61 Selected Damping Ratio Curves for Cohesive Soil Strata

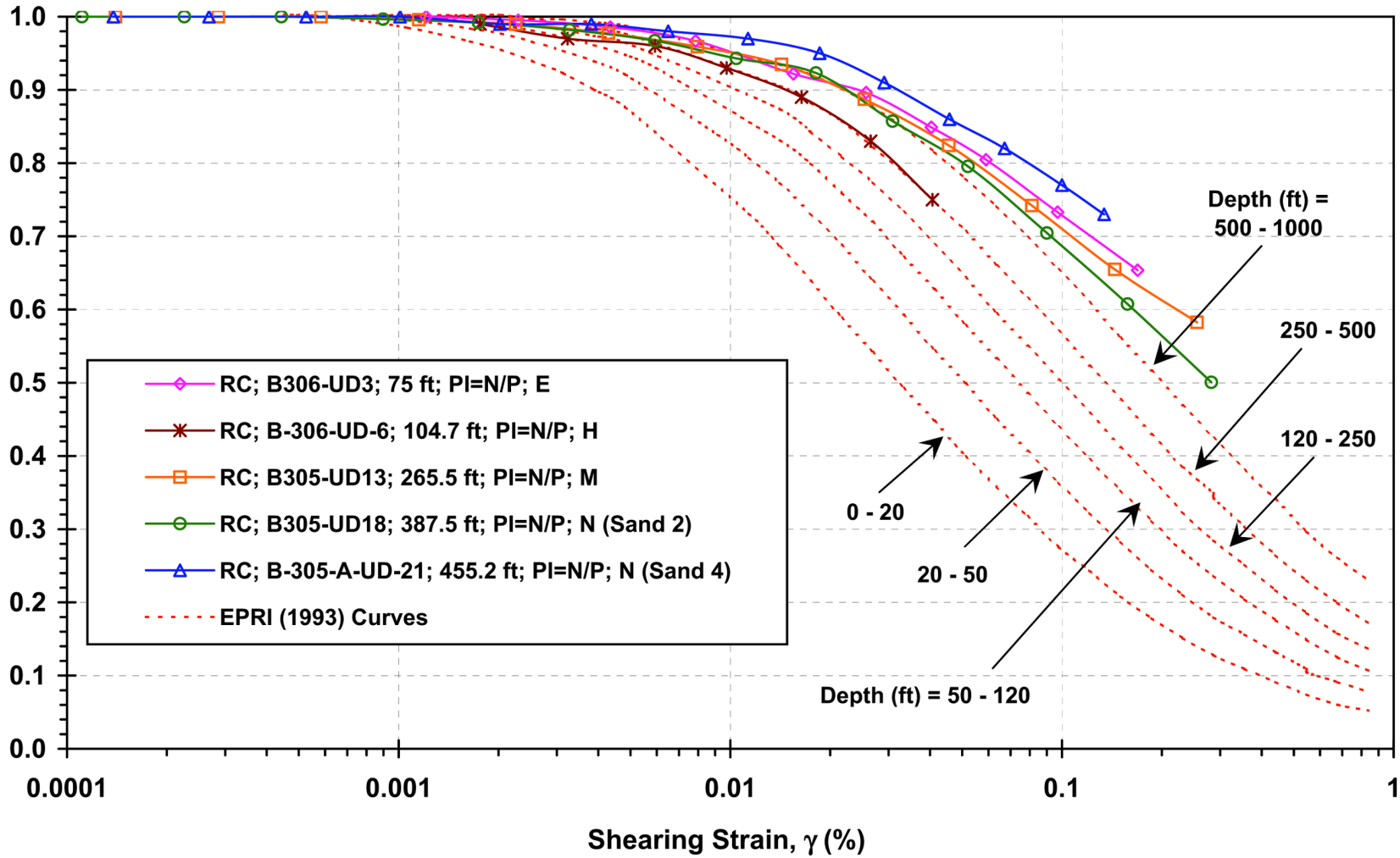

Figure 2.5S.4-62 Shear Modulus Degradation Based on RCTS Testing – All Sand Samples

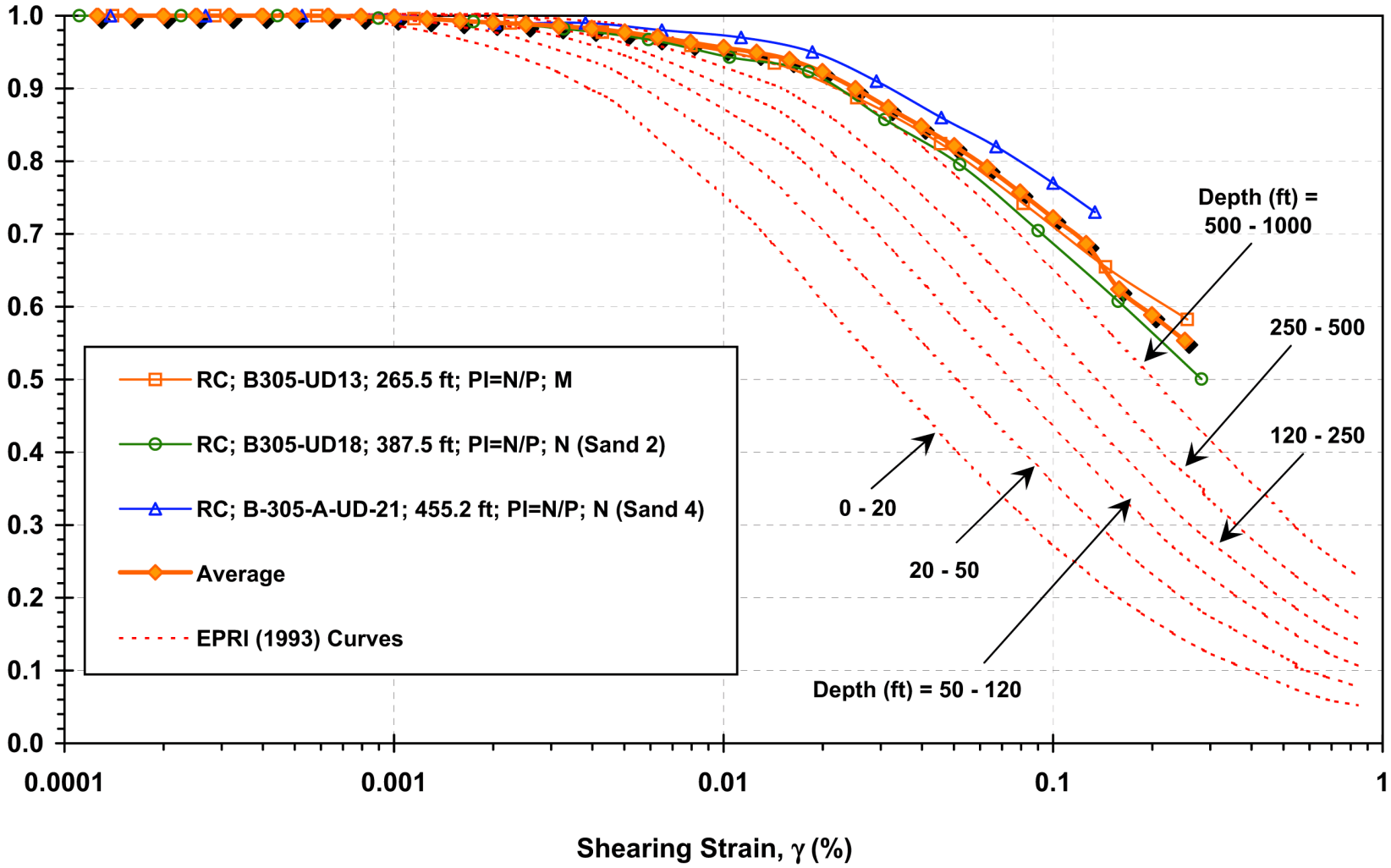

Figure 2.5S.4-63 Shear Modulus Degradation Based on RCTS Testing - Deep Sand Samples

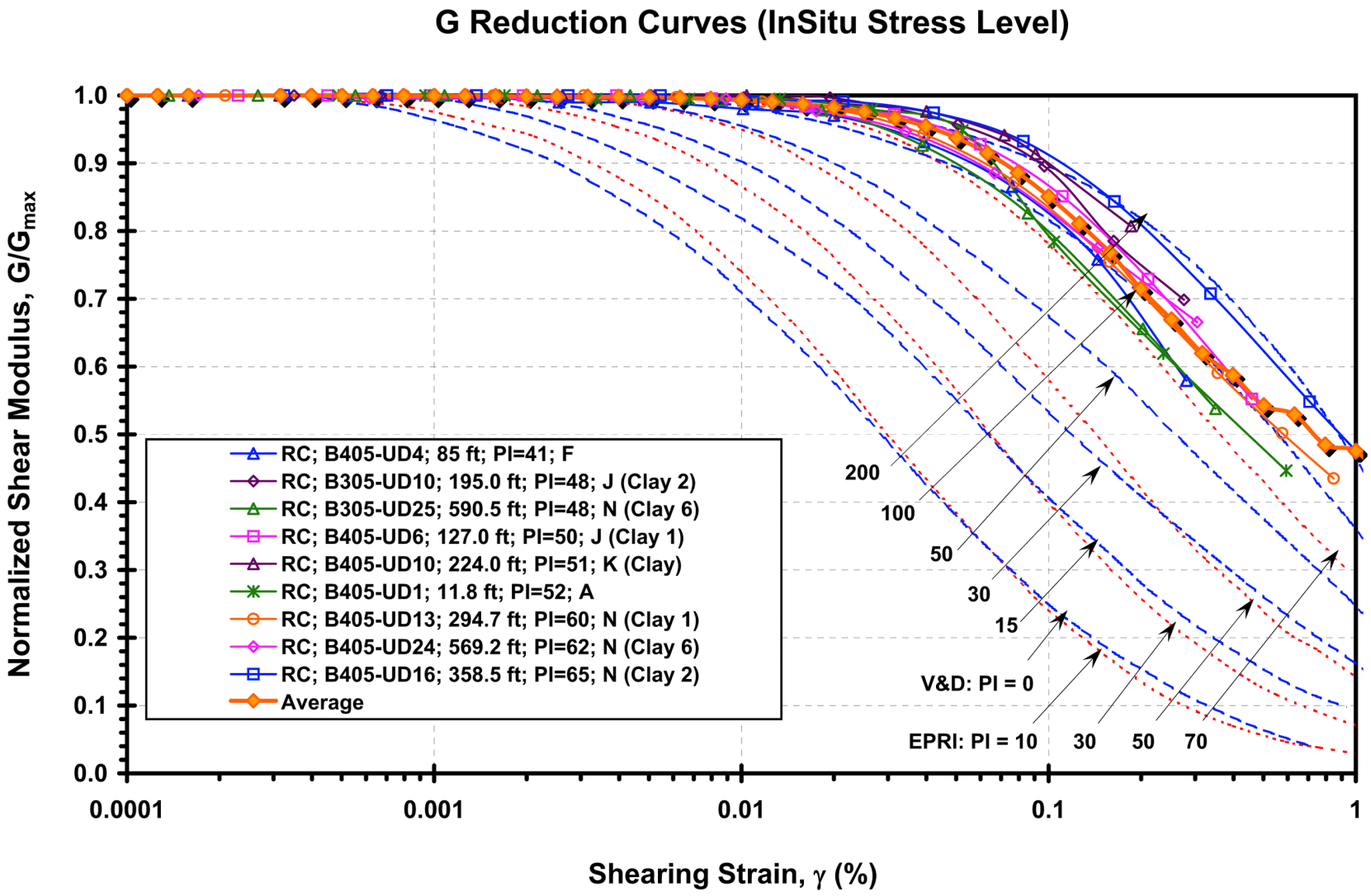

Figure 2.5S.4-64 Shear Modulus Degradation Based on RCTS Testing - High PI Clay Sample

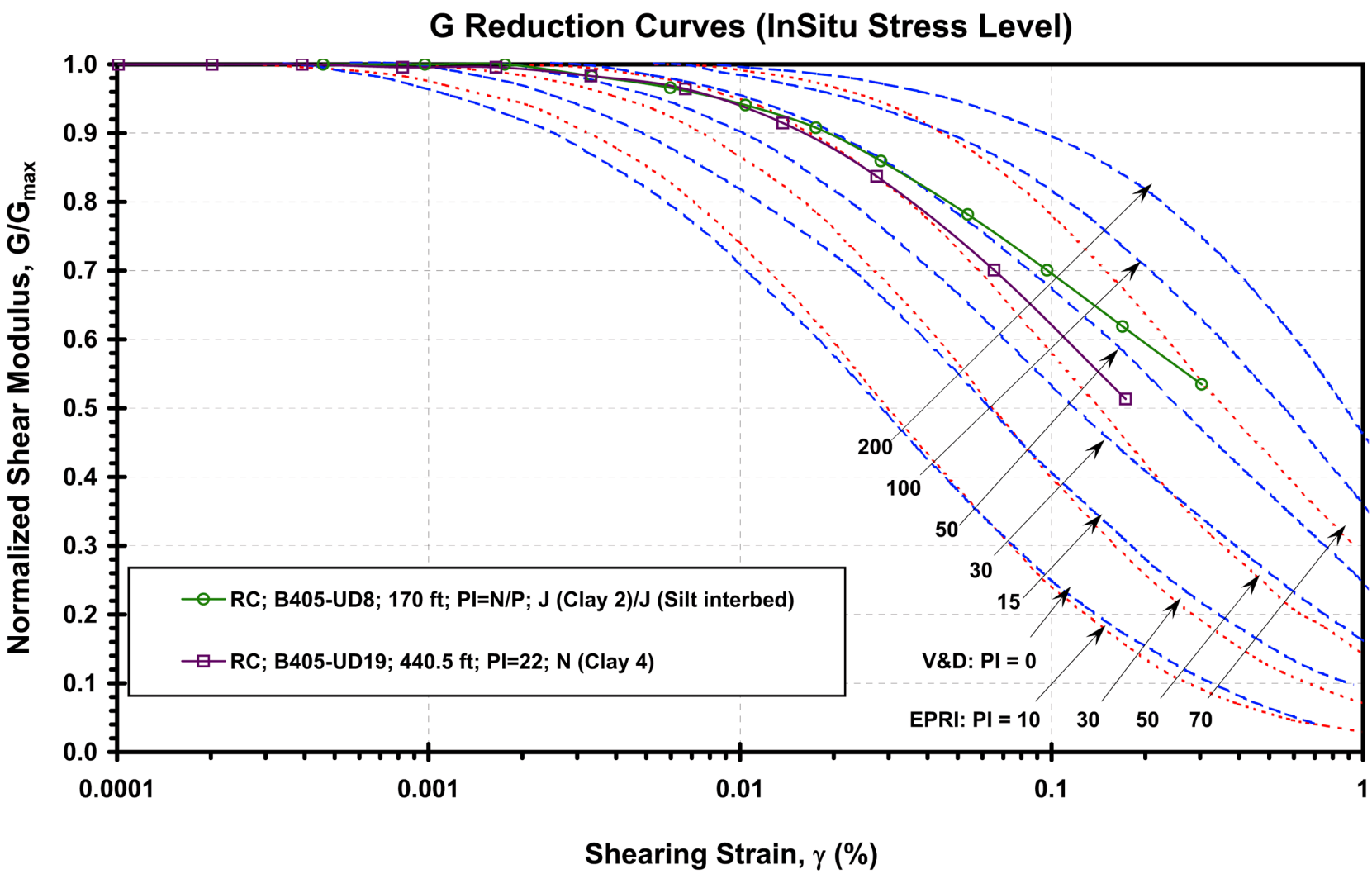

Figure 2.5S.4-65 Shear Modulus Degradation Based on RCTS Testing - Low PI Clay Sample

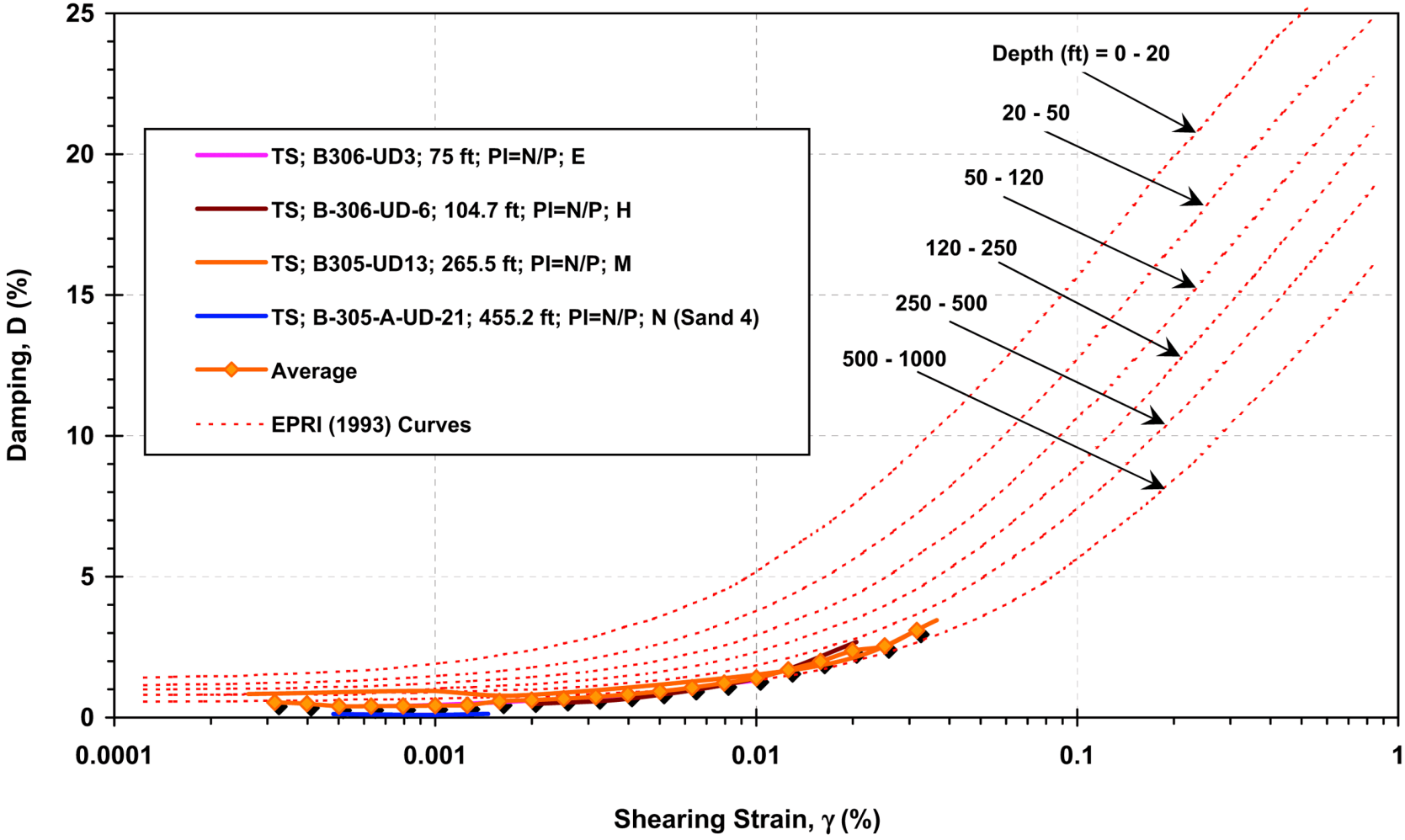

Figure 2.5S.4-66 Damping Curve Measurements Based on RCTS Testing - Sand Samples

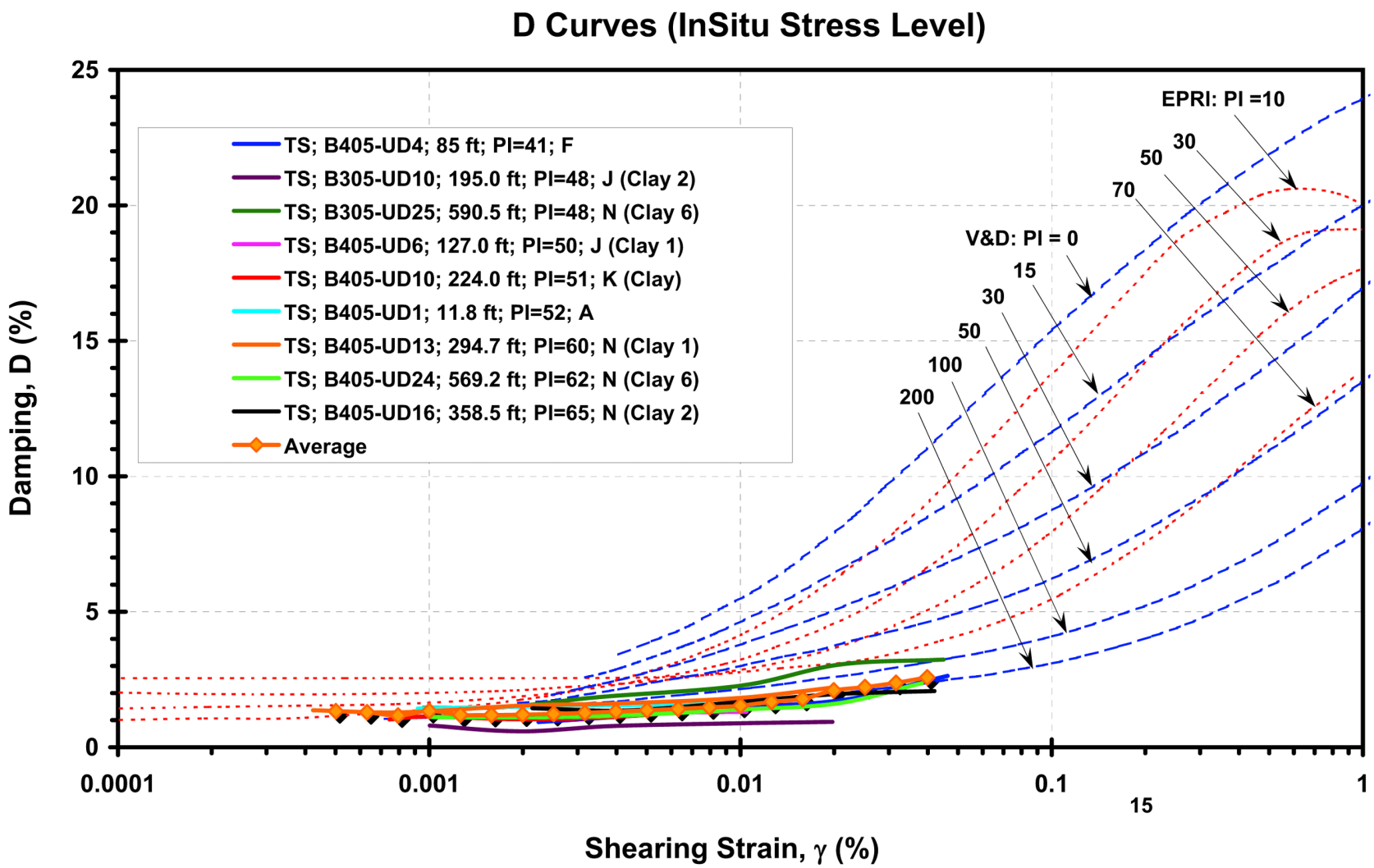

Figure 2.5S.4-67 Damping Curve Measurements Based on RCTS Testing - High PI Clay Samples

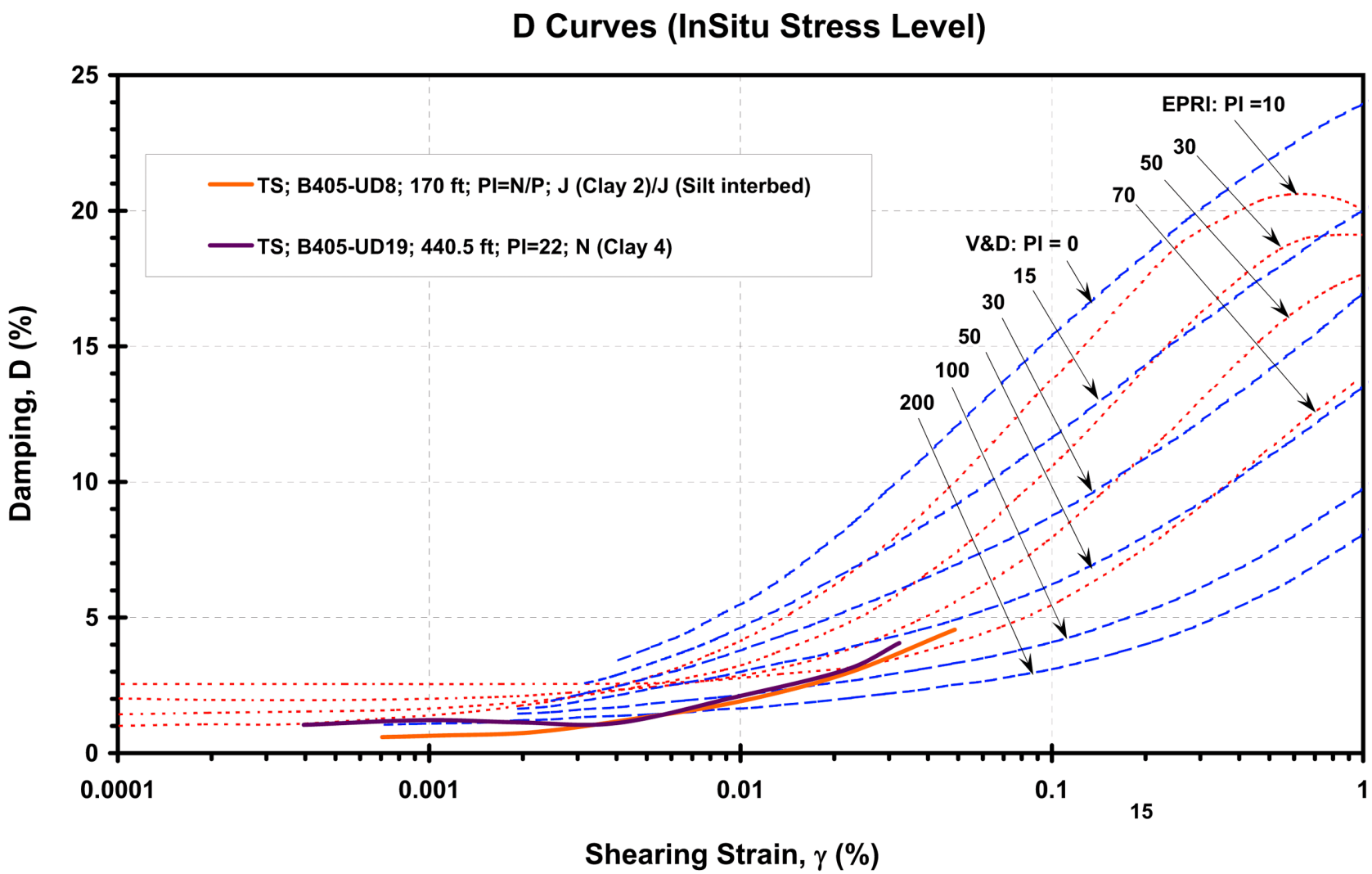

Figure 2.5S.4-68 Damping Curve Measurements Based on RCTS Testing - Low PI Samples

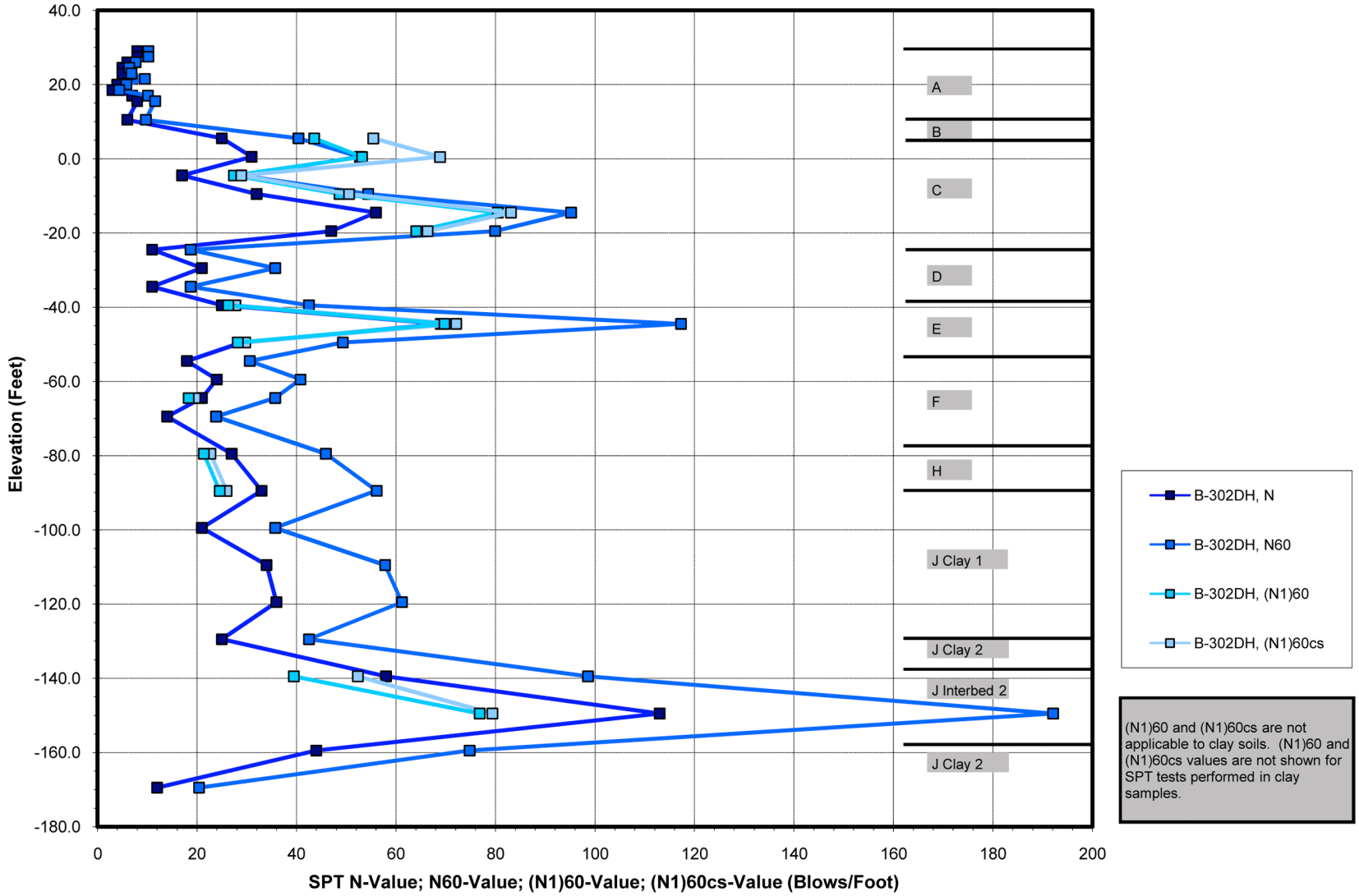

Figure 2.5S.4-69 STP 3; Example (SPT N-Value N -to- N60 -to- $(N_1)60$ -to- $(N_1)_{60cs}$)

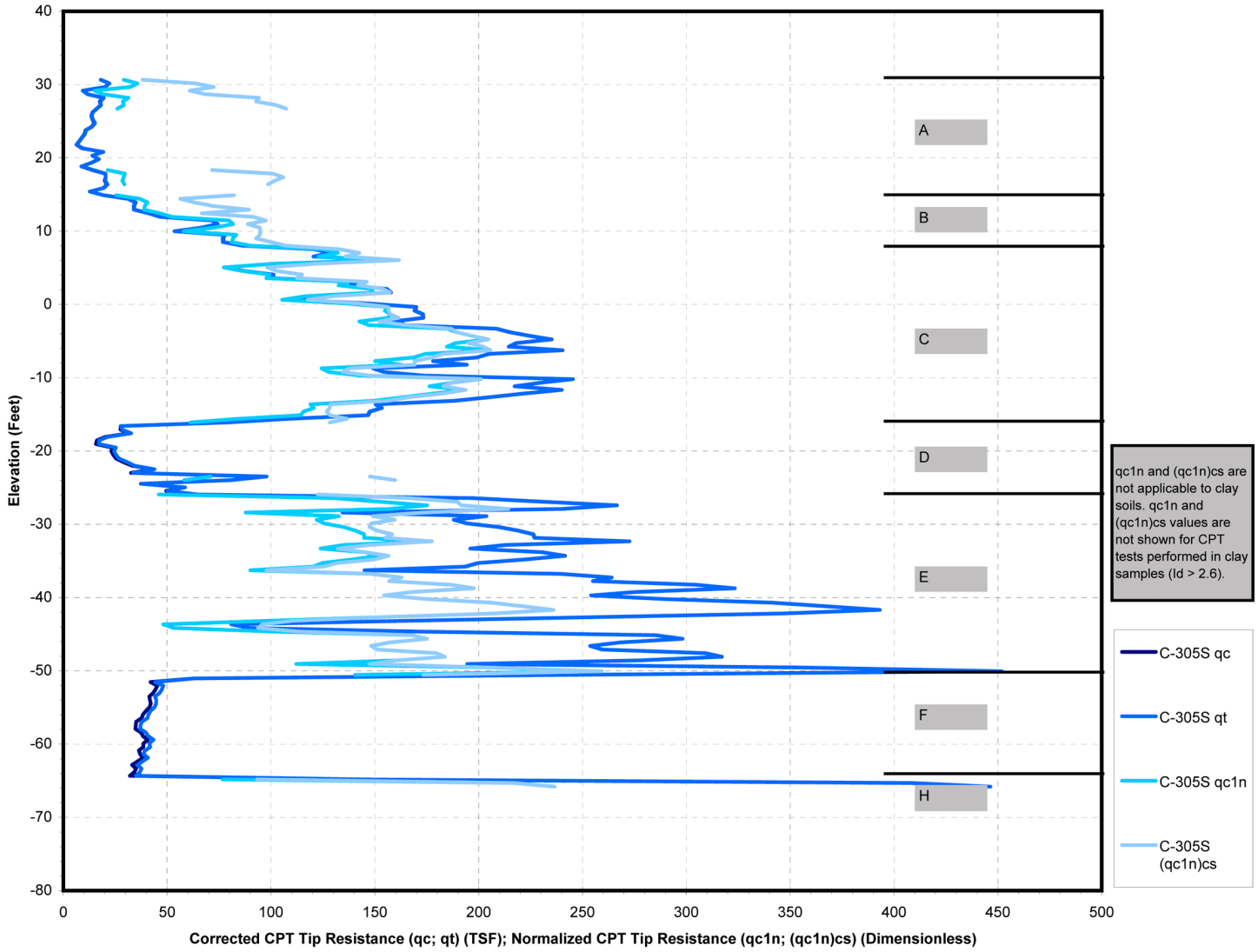

Figure 2.5S.4-70 CPT C-305S (CPT 3; Example; CPT Tip Resistance q_c -to- q_t -to- q_{c1n} -to- $(q_{c1n})_{cs}$)

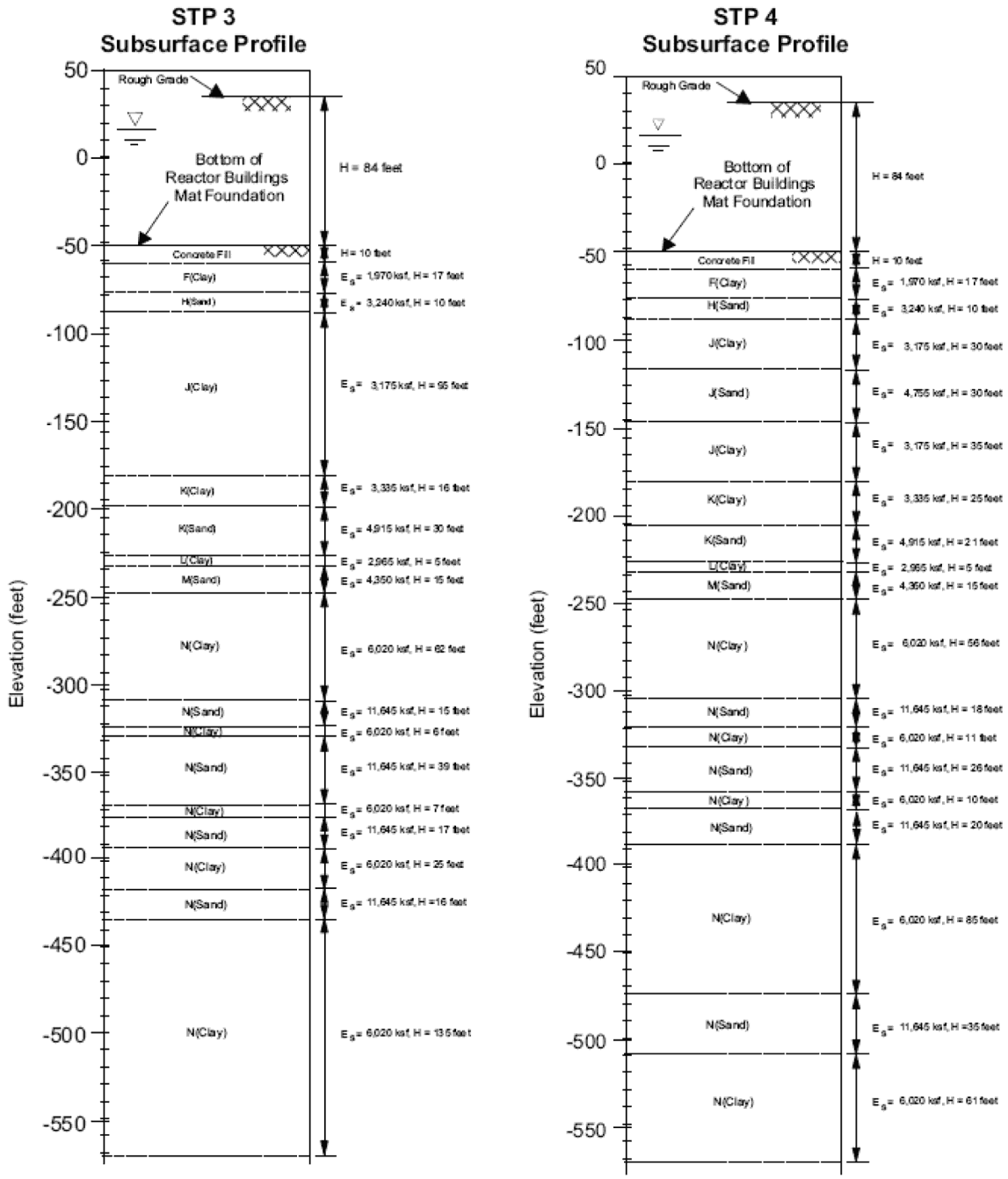

Figure 2.5S.4-71 Adopted Subsurface profiles for the STP 3 & 4 Reactor Buildings

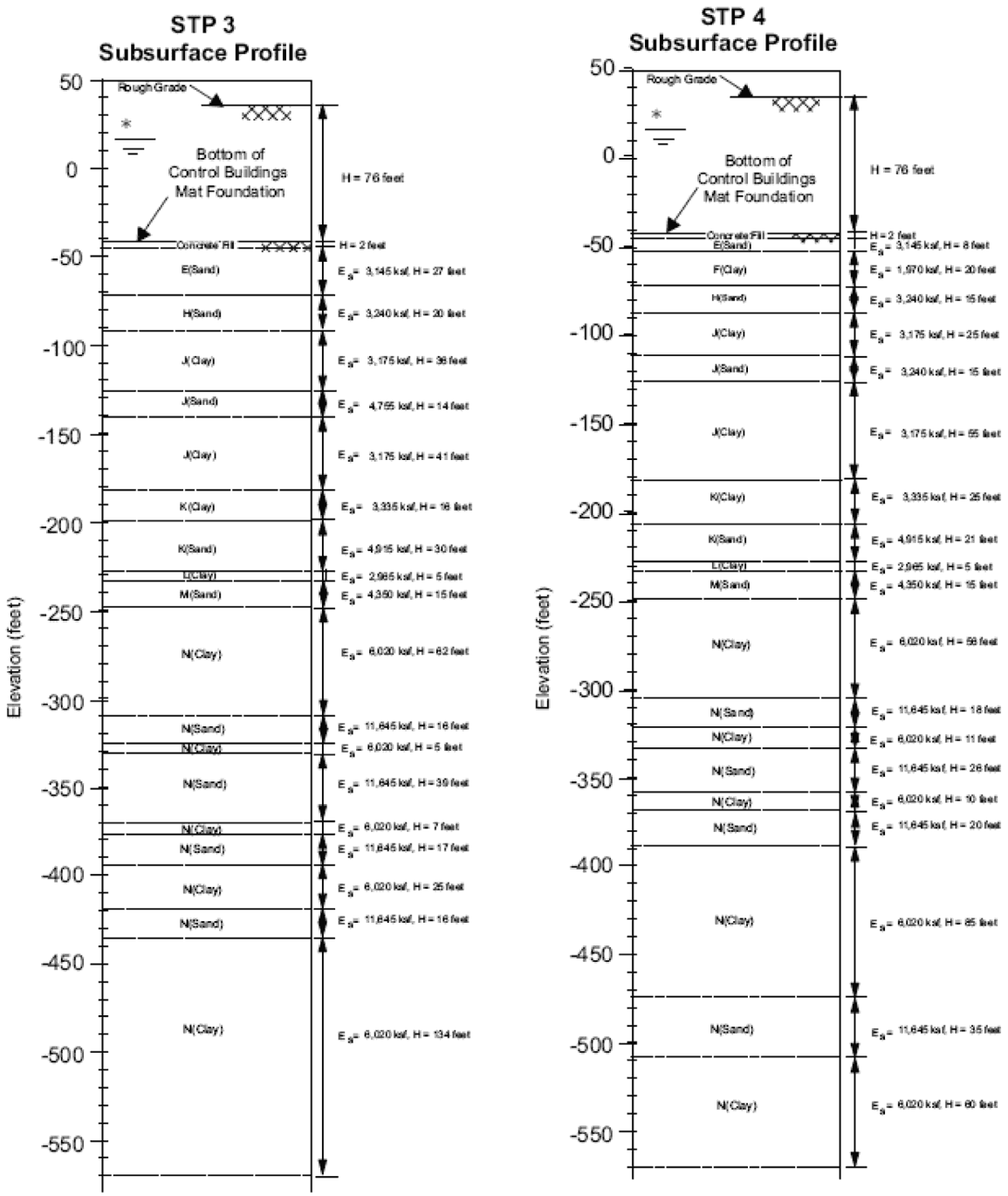

Figure 2.5S.4-72 Adopted Subsurface profiles for the STP 3 & 4 Control Buildings

Figure 2.5S.4-73 Not Used

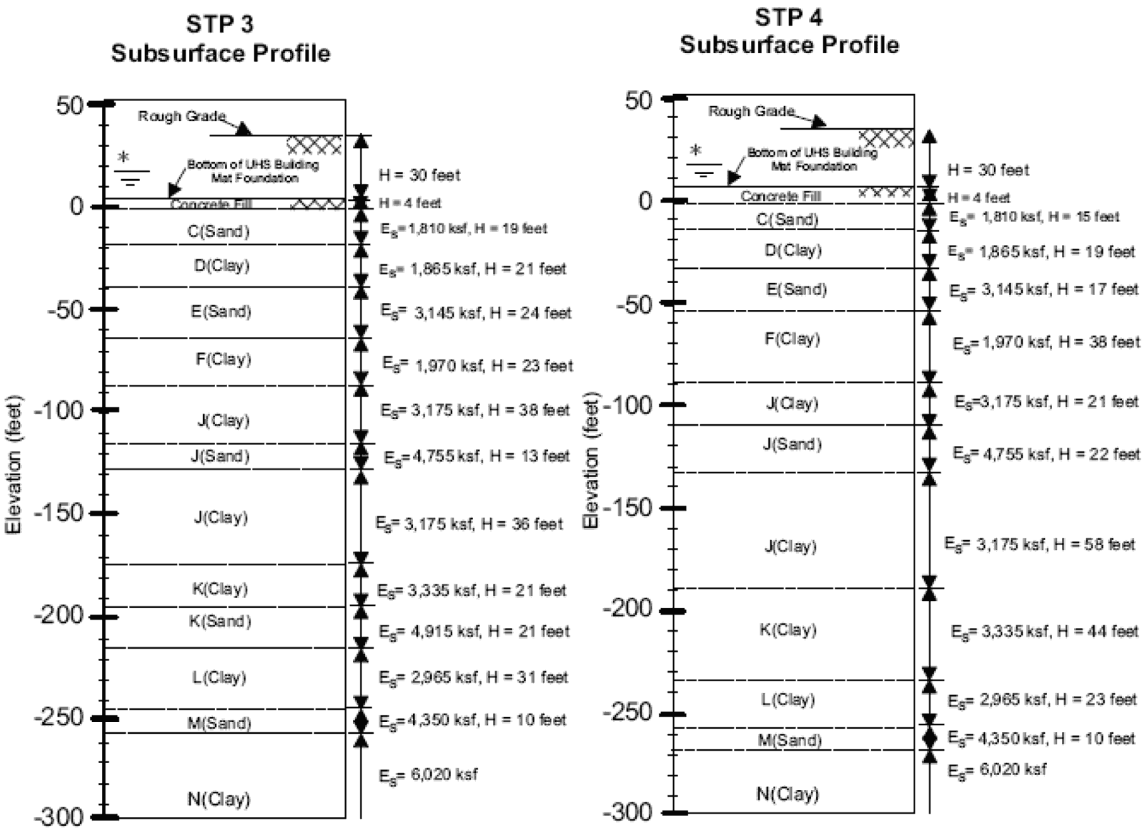

Figure 2.5S.4-74 Adopted Subsurface profiles for the STP 3 & 4 UHS Basins

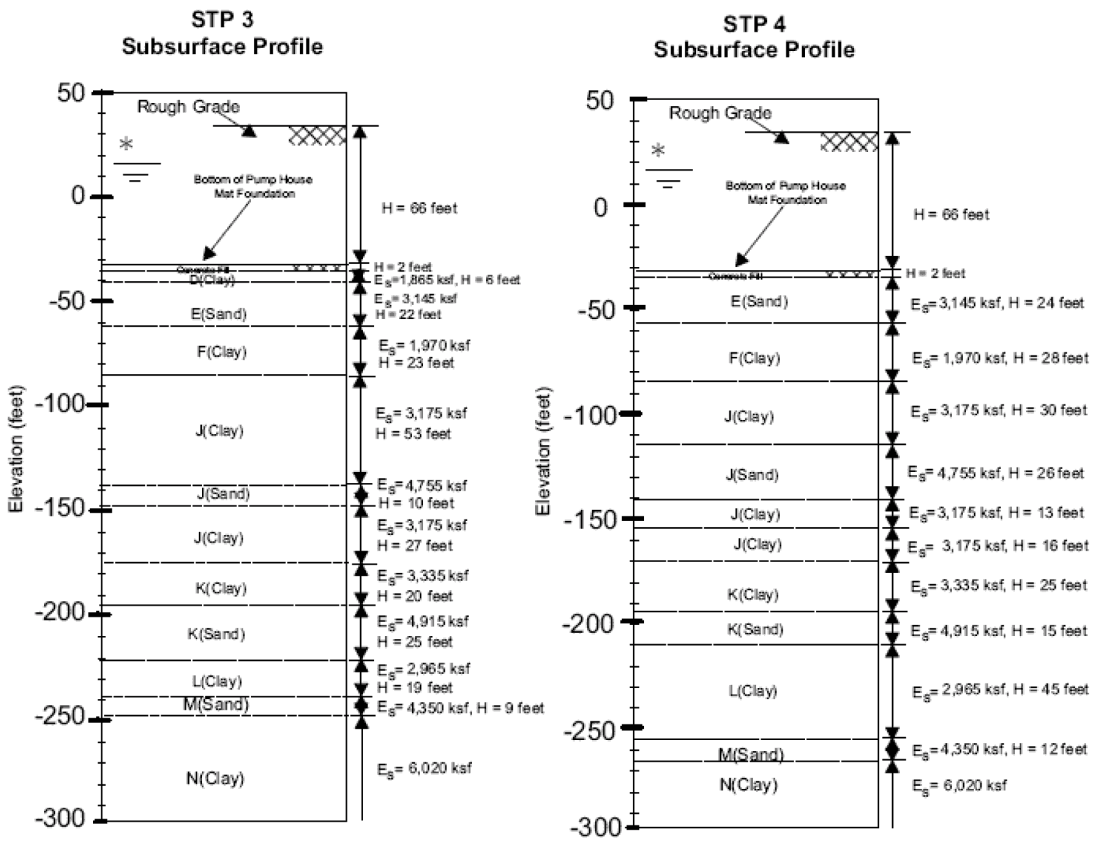

Figure 2.5S.4-74A Adopted Subsurface Profiles for the STP 3 & 4 RSW Pump Houses

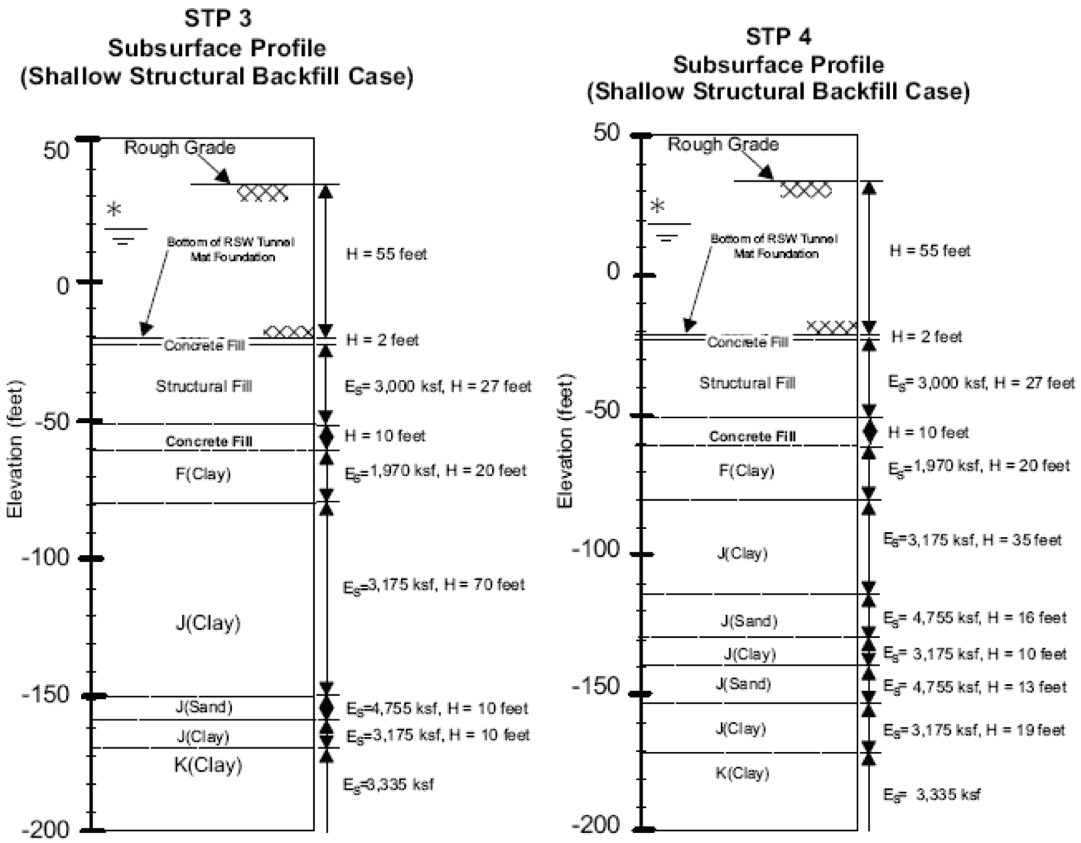

Figure 2.5S.4-74B Adopted Subsurface Profiles for the STP 3 & 4 RSW Tunnels

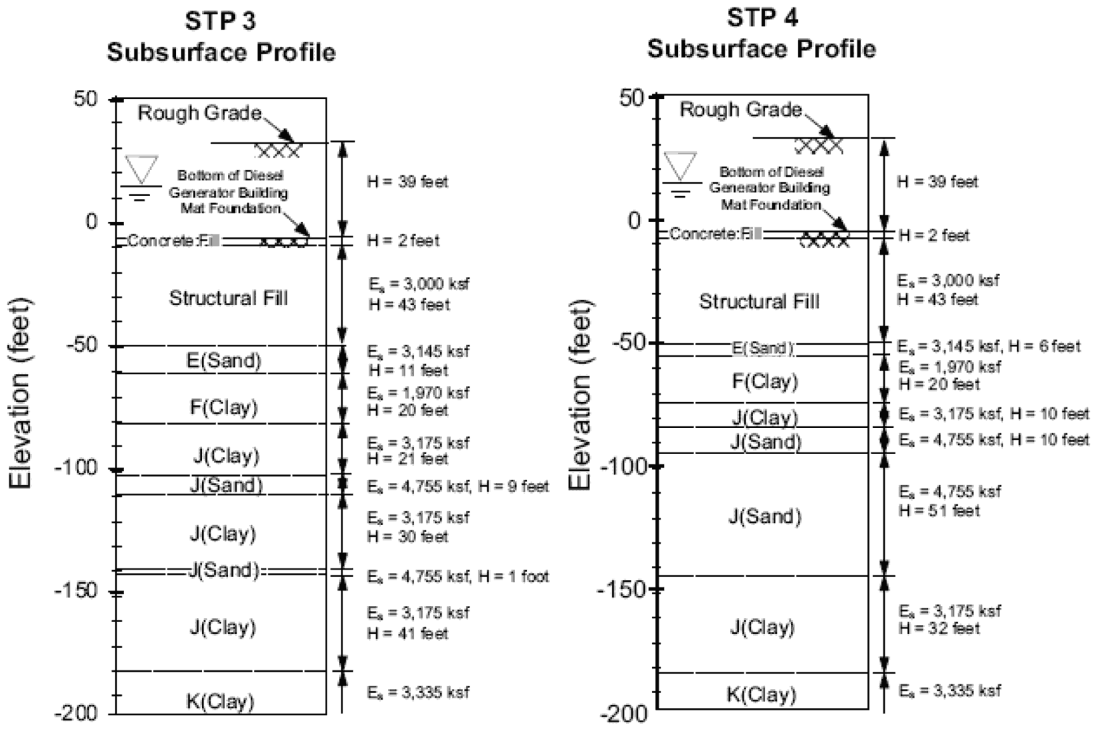

Figure 2.5S.4-74C Adopted Subsurface Profiles for the STP 3 & 4 Diesel Generator Fuel Oil Storage Vaults (No. 1 of 3)

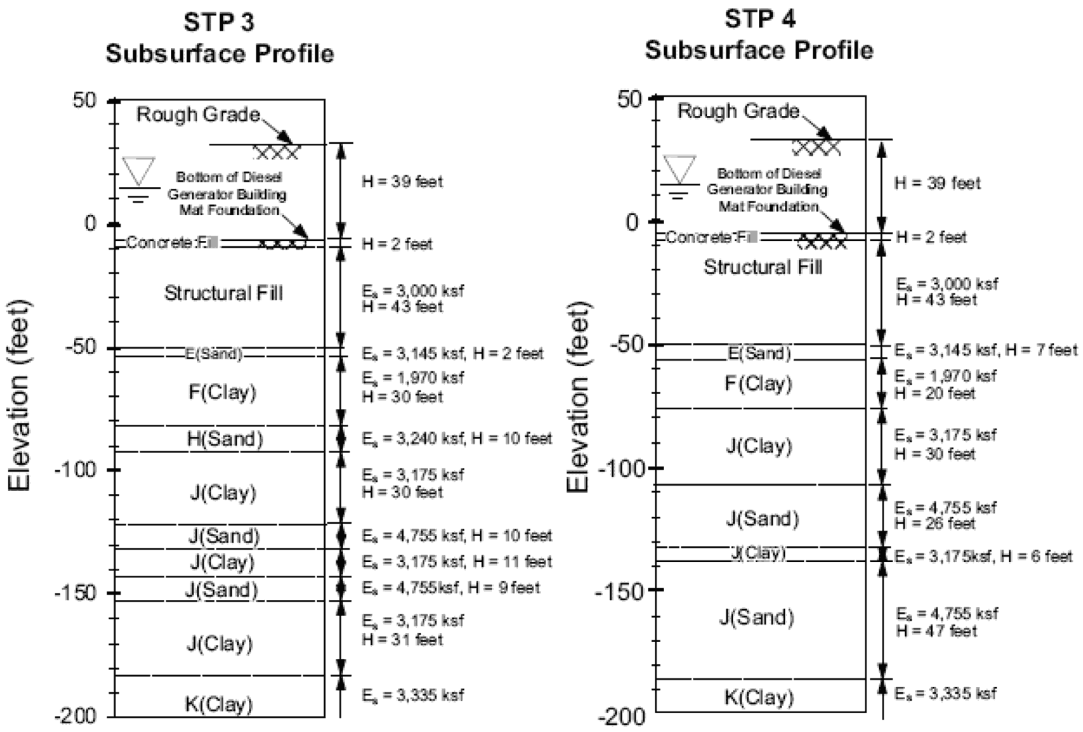

Figure 2.5S.4-74C Adopted Subsurface Profiles for the STP 3 & 4 Diesel Generator Fuel Oil Storage Vaults (No. 2 of 3)

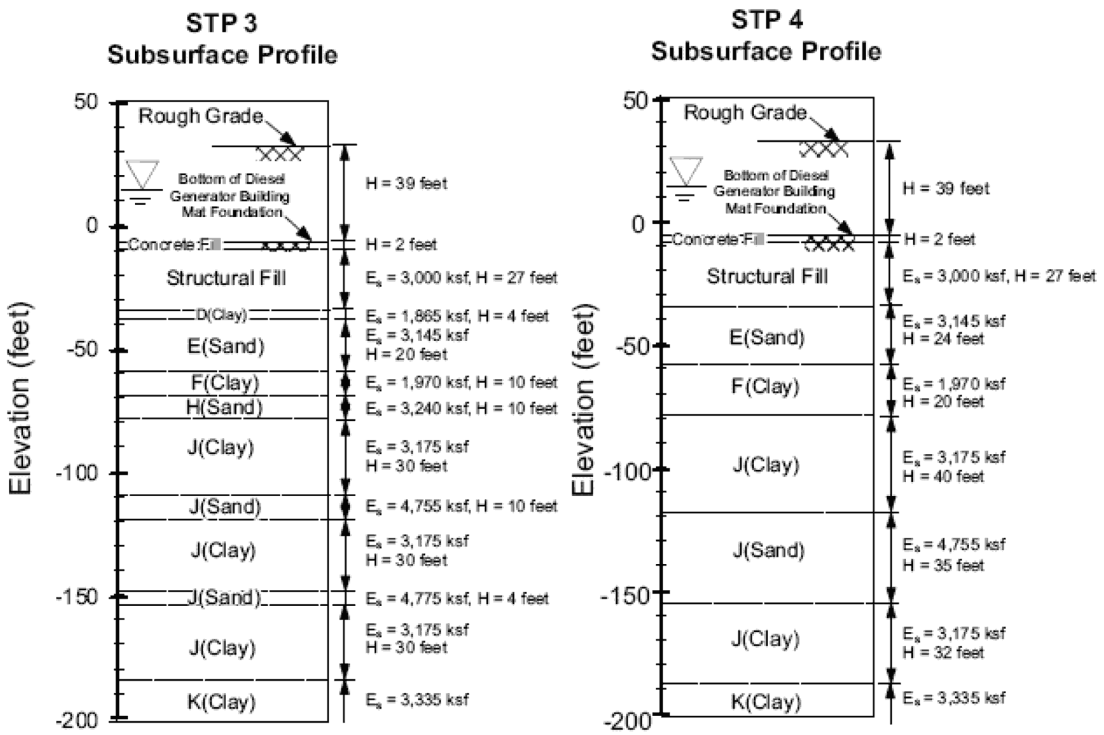

Figure 2.5S.4-74C Adopted Subsurface Profiles for the STP 3 & 4 Diesel Generator Fuel Oil Storage Vaults (No. 3 of 3)

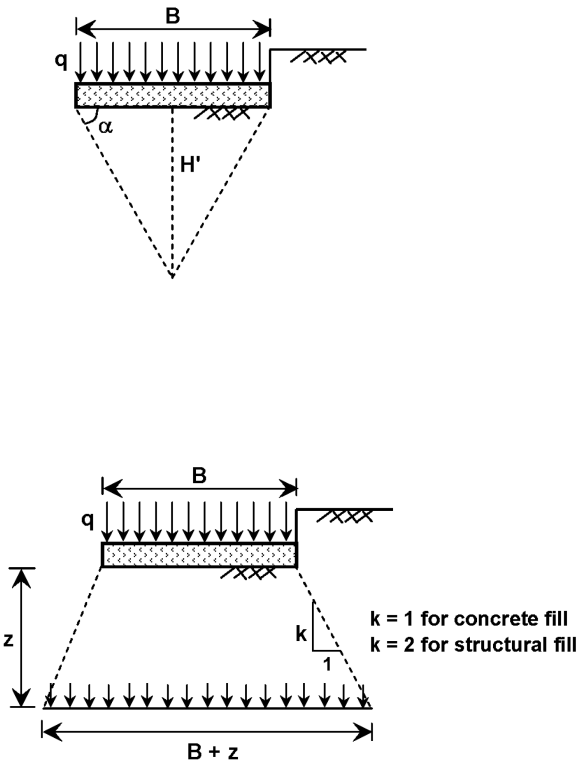

Figure 2.5S.4-75 Nomenclature for Foundation Wedge and Pressure Distribution Diagrams

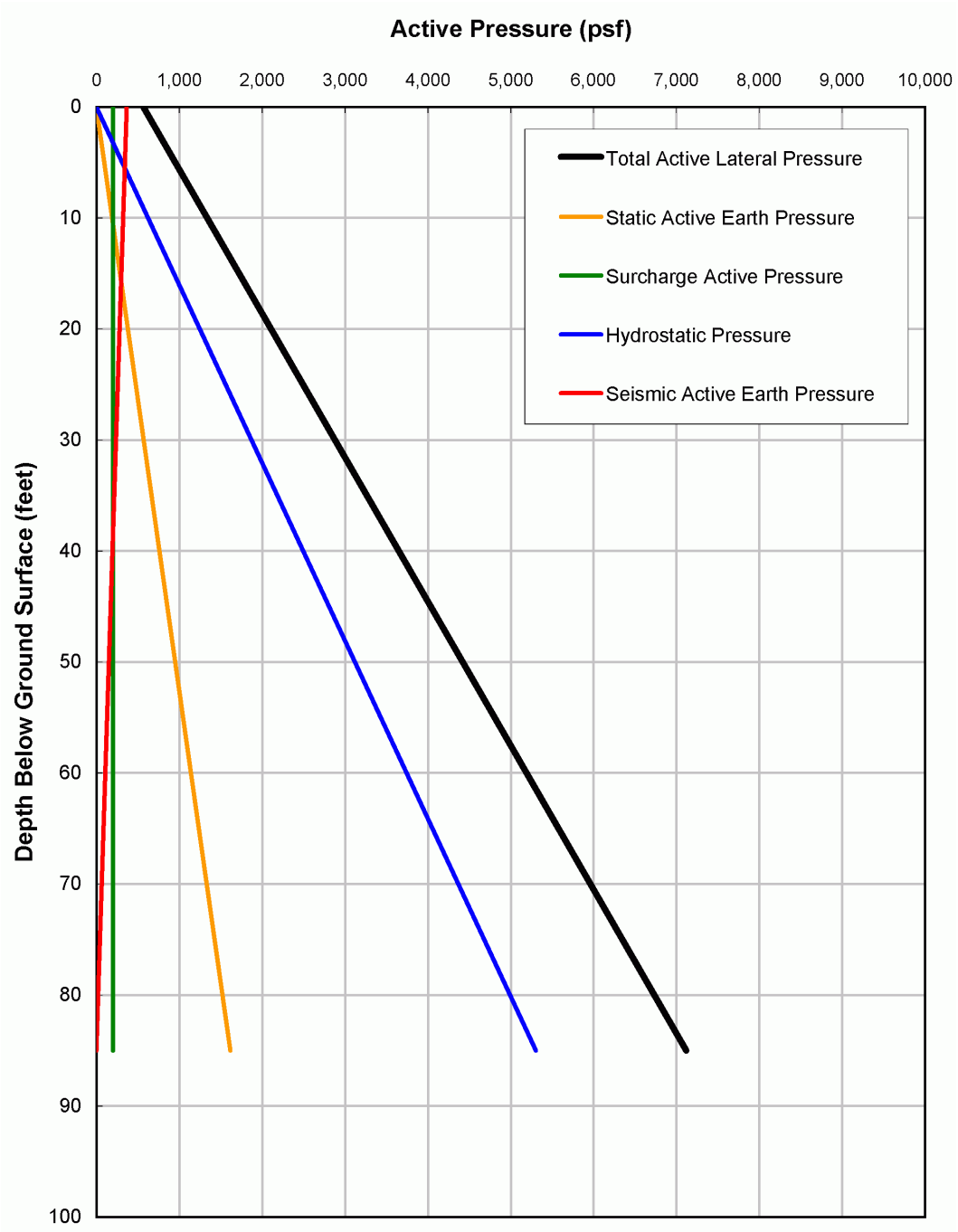

Figure 2.5S.4-76 Sample Active Lateral Earth Pressure Diagrams

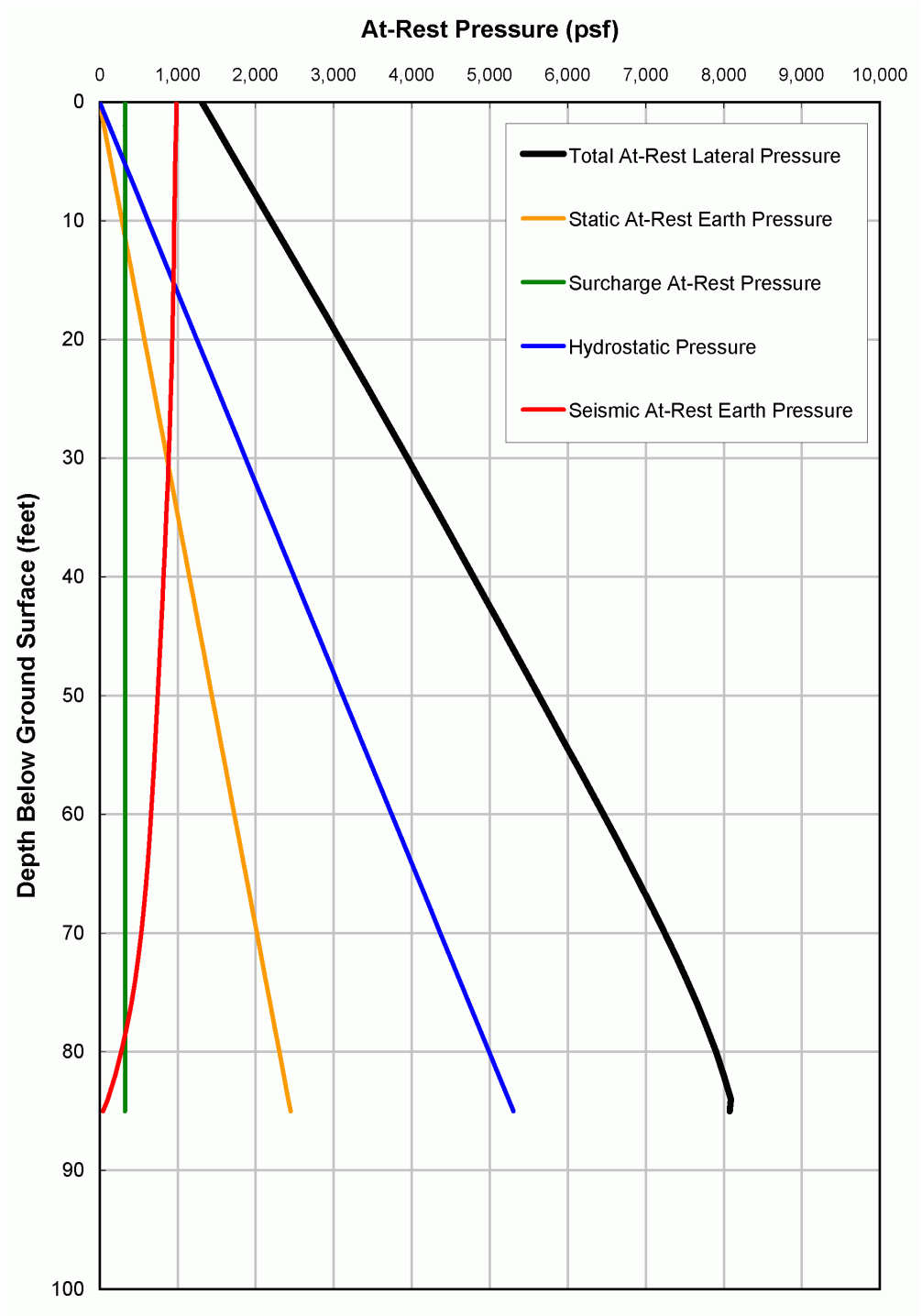

Figure 2.5S.4-77 Sample At-Rest Lateral Earth Pressure Diagrams

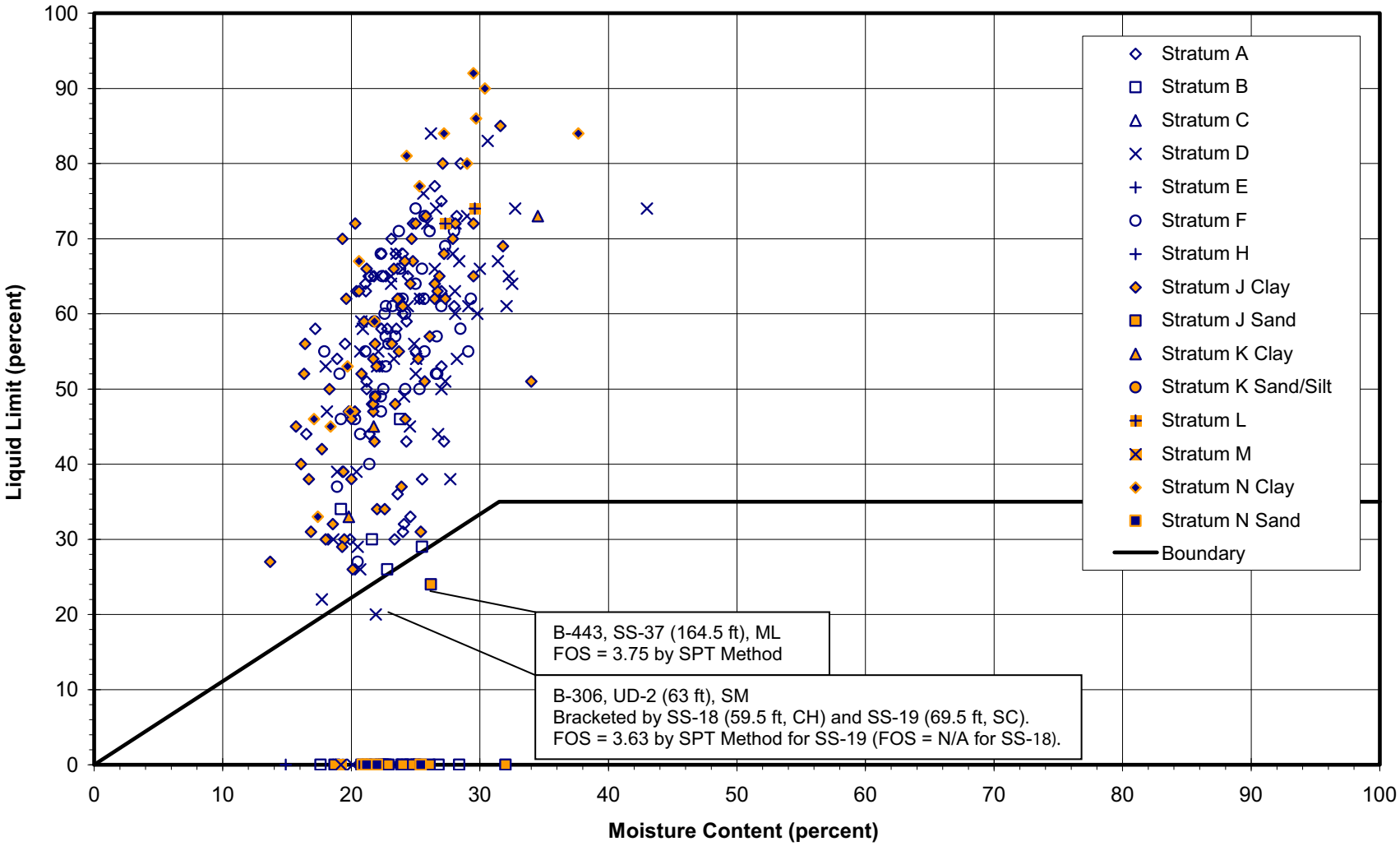

Figure 2.5S.4-78 Liquefaction Evaluation of Clayey Soils

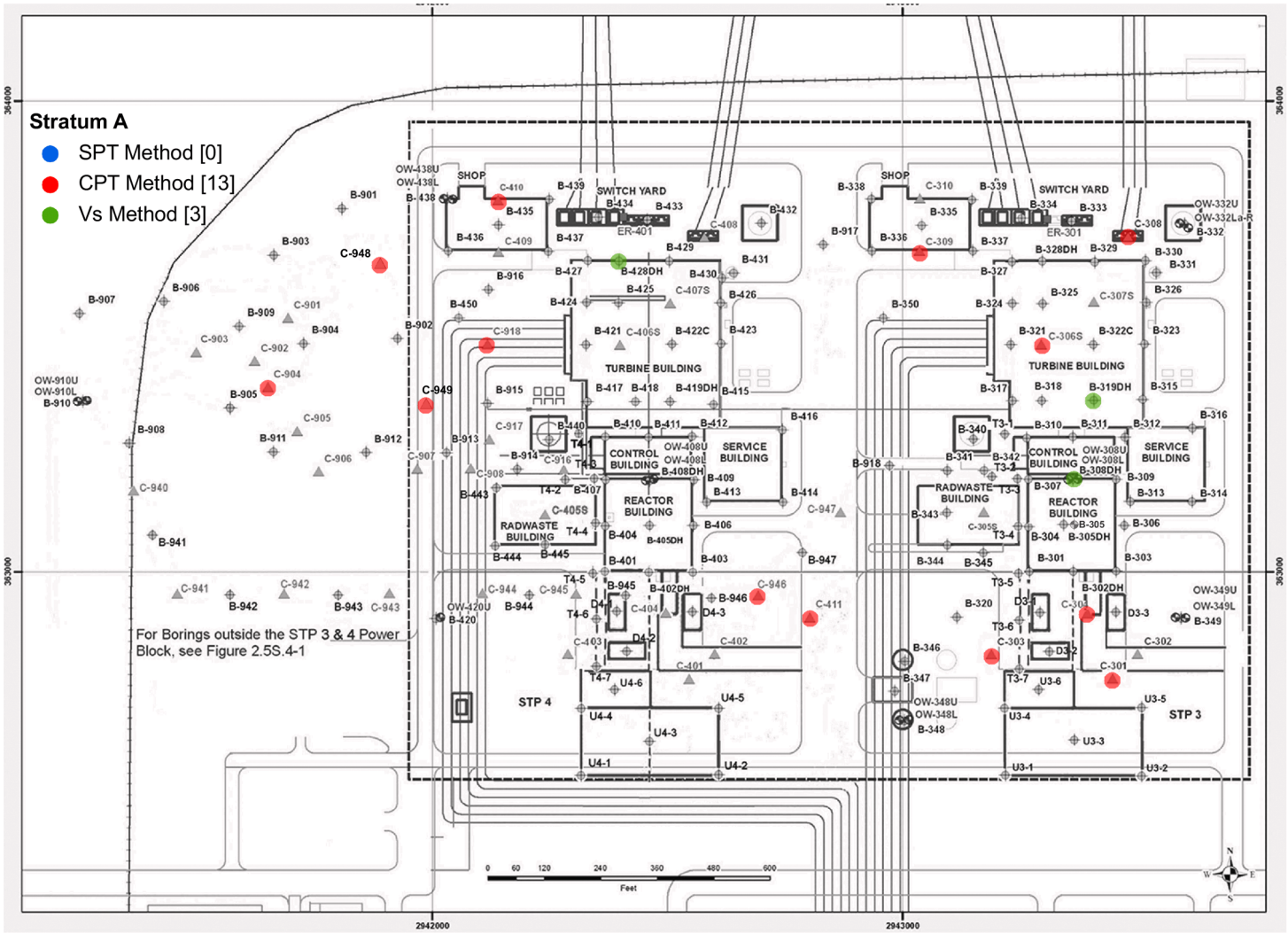

Figure 2.5S.4-79A Spatial Distribution of Low Liquefaction Factor of Safety Values, Stratum A

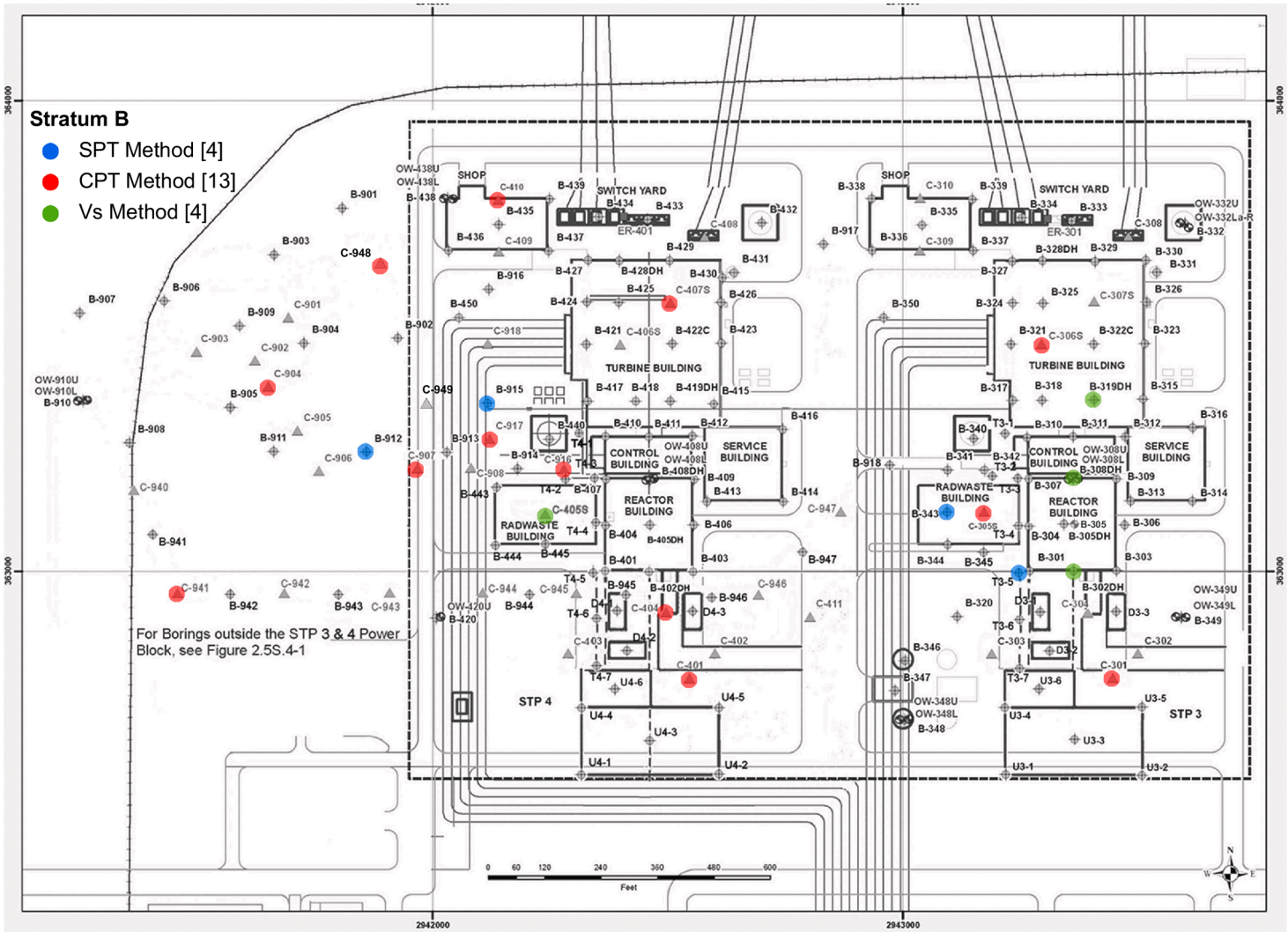

Figure 2.5S.4-79B Spatial Distribution of Low Liquefaction Factor of Safety Values, Stratum B

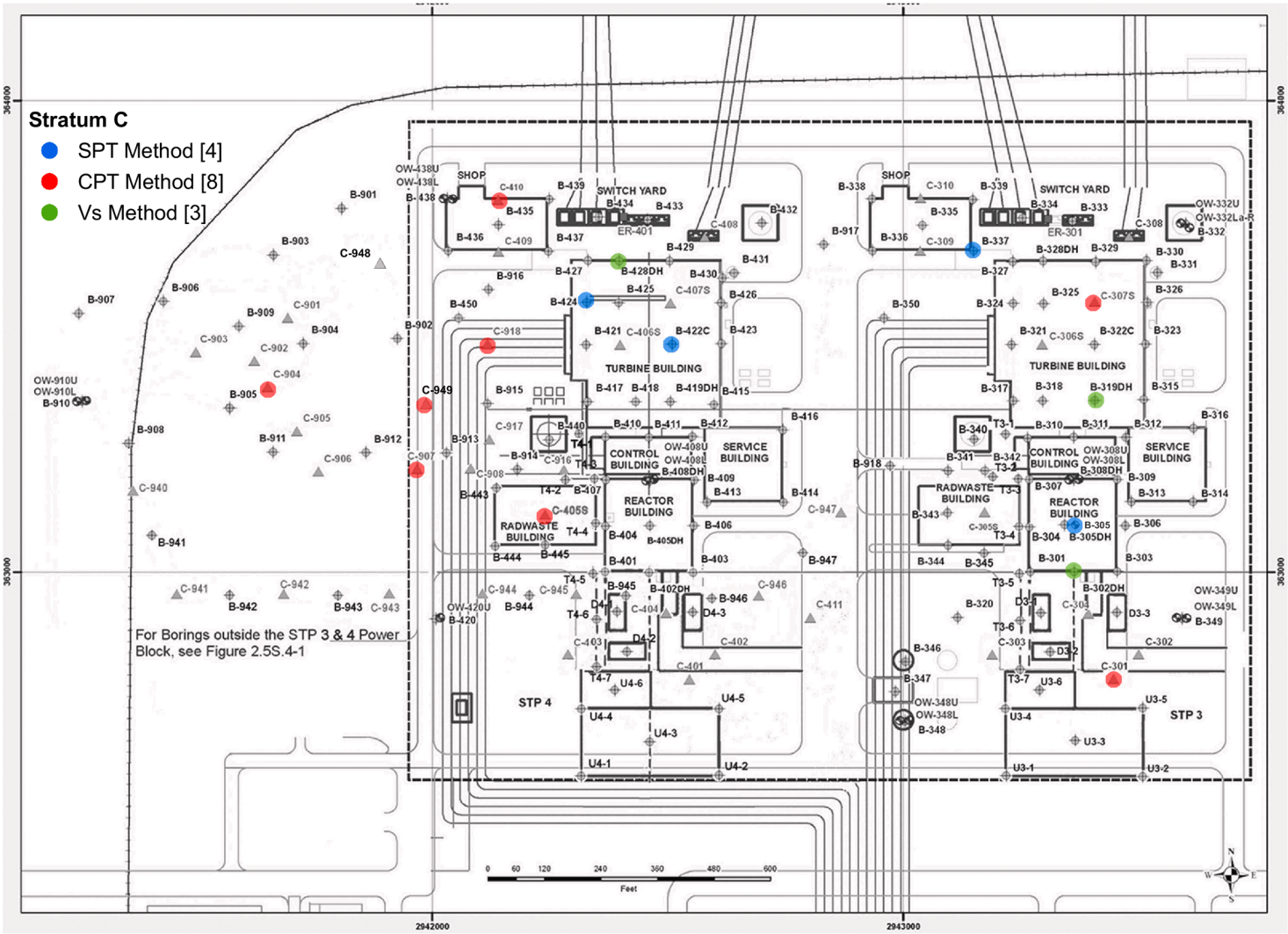

Figure 2.5S.4-79C Spatial Distribution of Low Liquefaction Factor of Safety Values, Stratum C

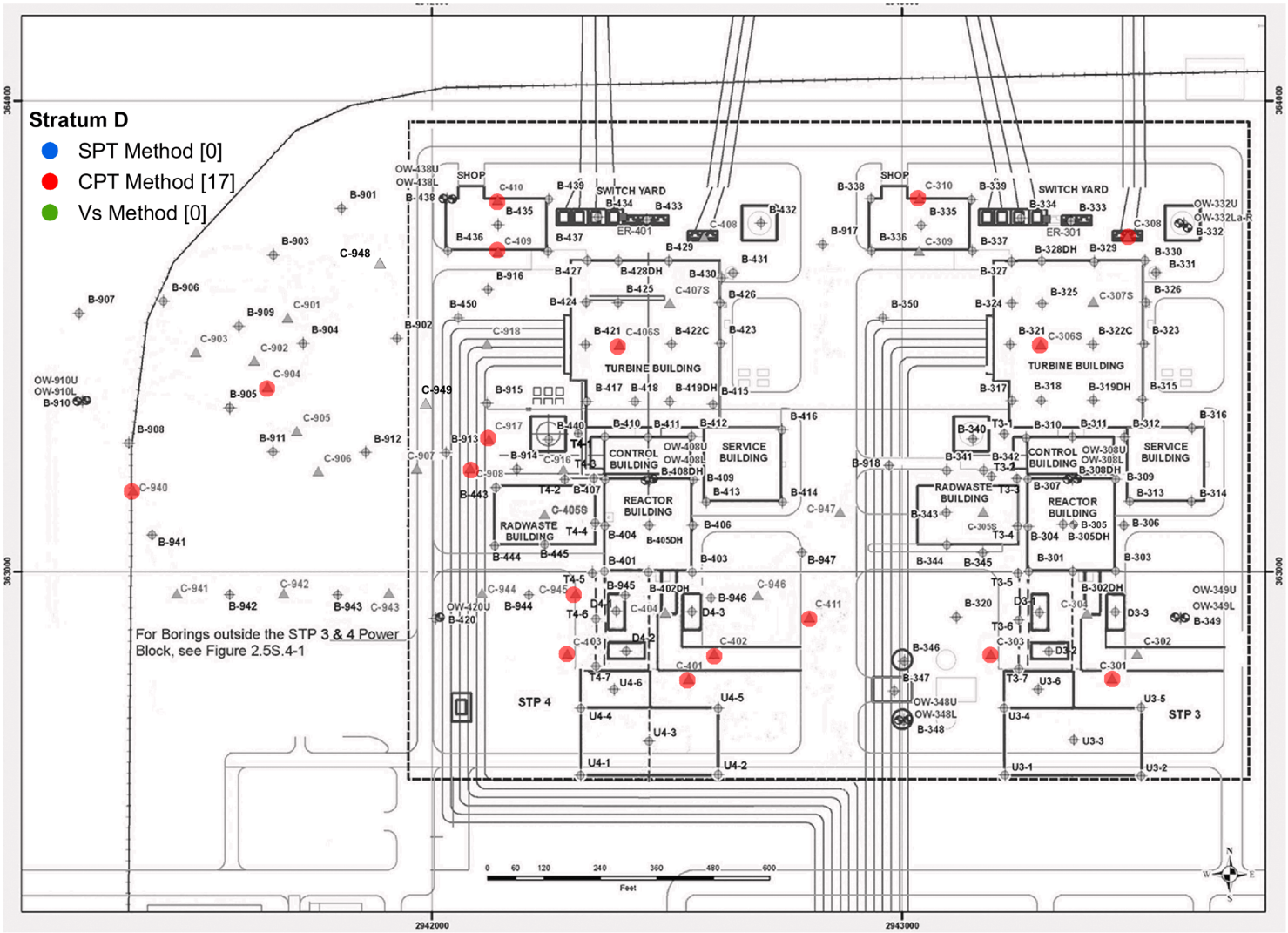

Figure 2.5S.4-79D Spatial Distribution of Low Liquefaction Factor of Safety Values, Stratum D

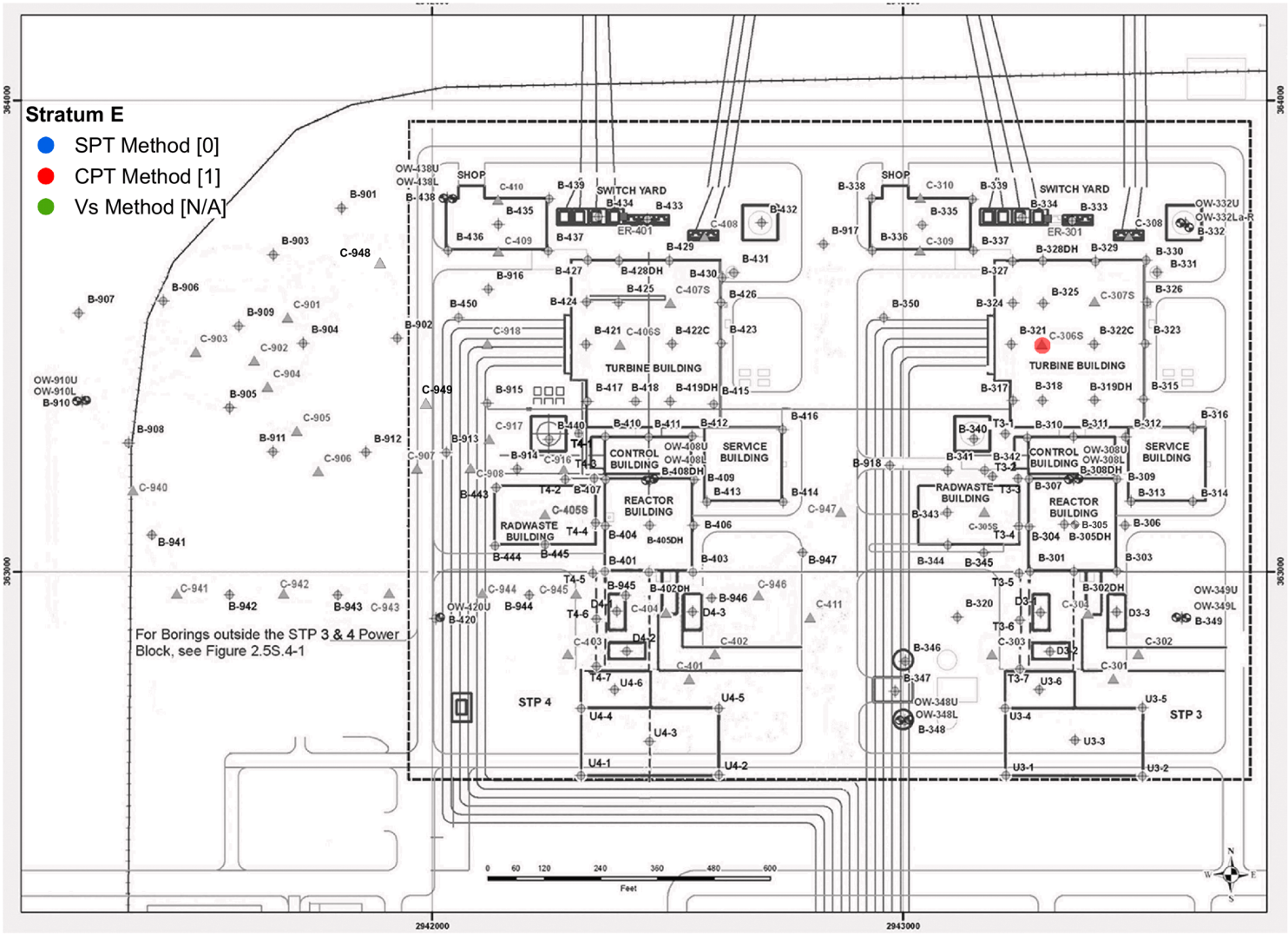

Figure 2.5S.4-79E Spatial Distribution of Low Liquefaction Factor of Safety Values, Stratum E

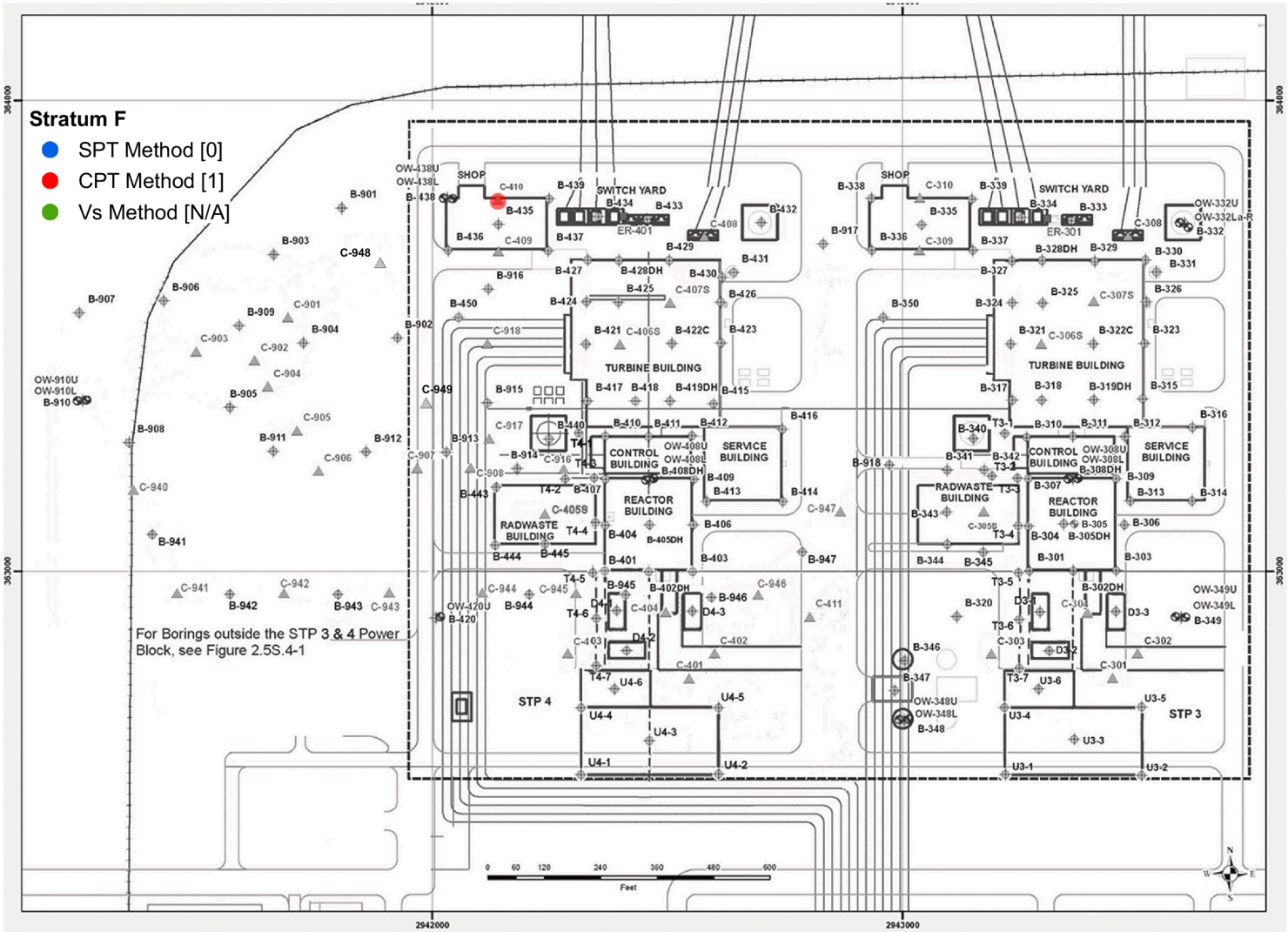

Figure 2.5S.4-79F Spatial Distribution of Low Liquefaction Factor of Safety Values, Stratum F

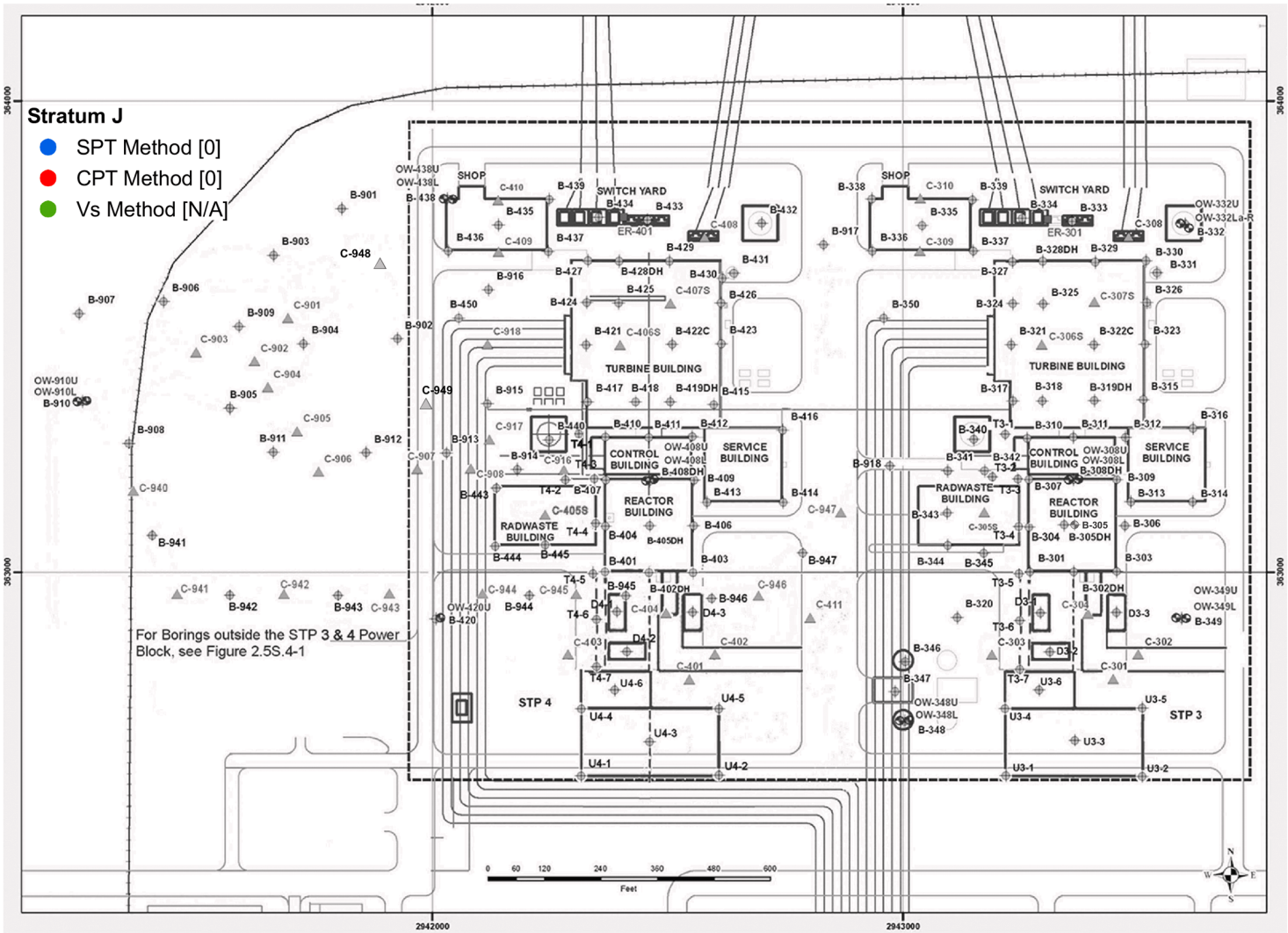

Figure 2.5S.4-79J Spatial Distribution of Low Liquefaction Factor of Safety Values, Stratum J

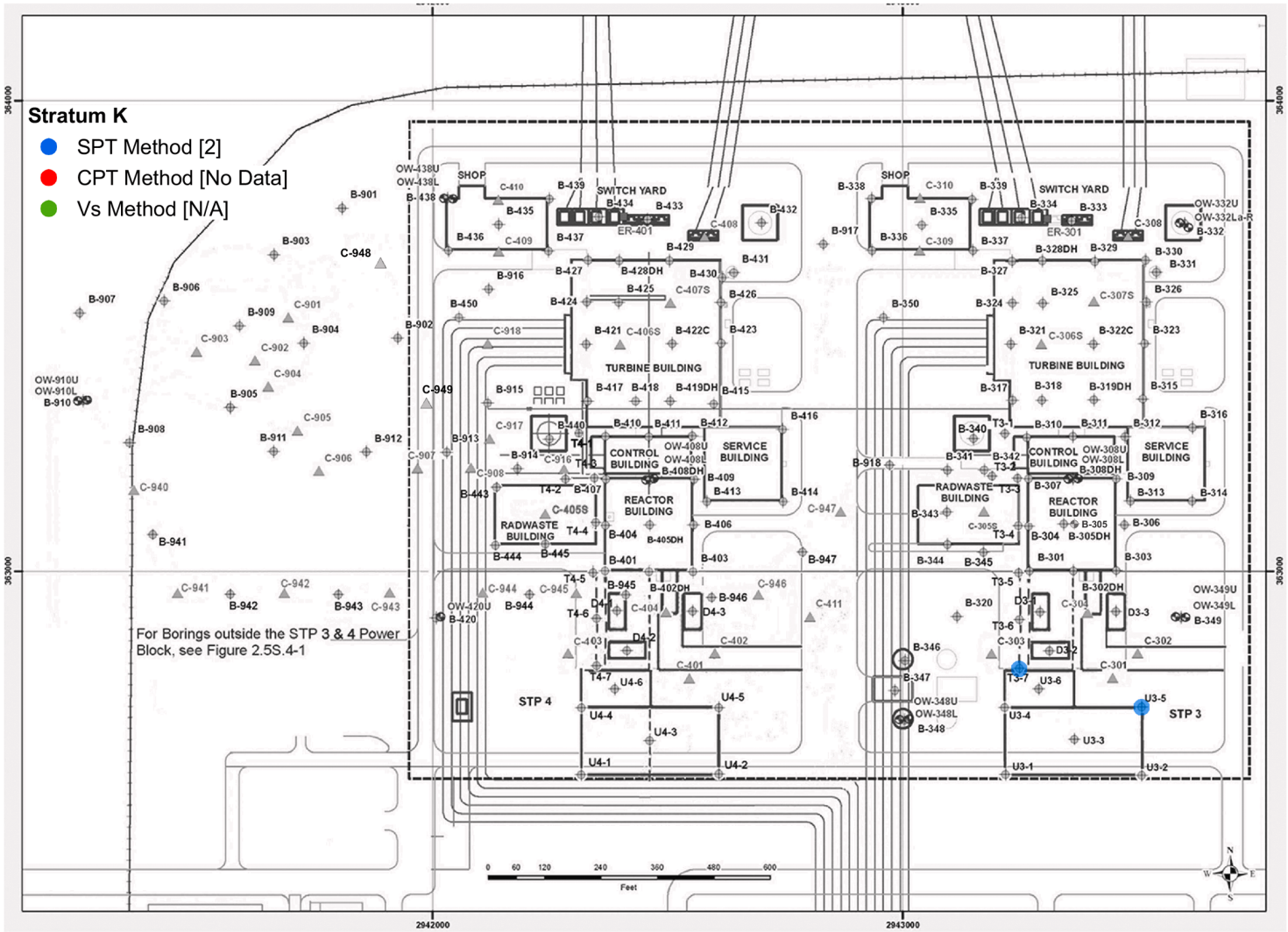

Figure 2.5S.4-79K Spatial Distribution of Low Liquefaction Factor of Safety Values, Stratum K

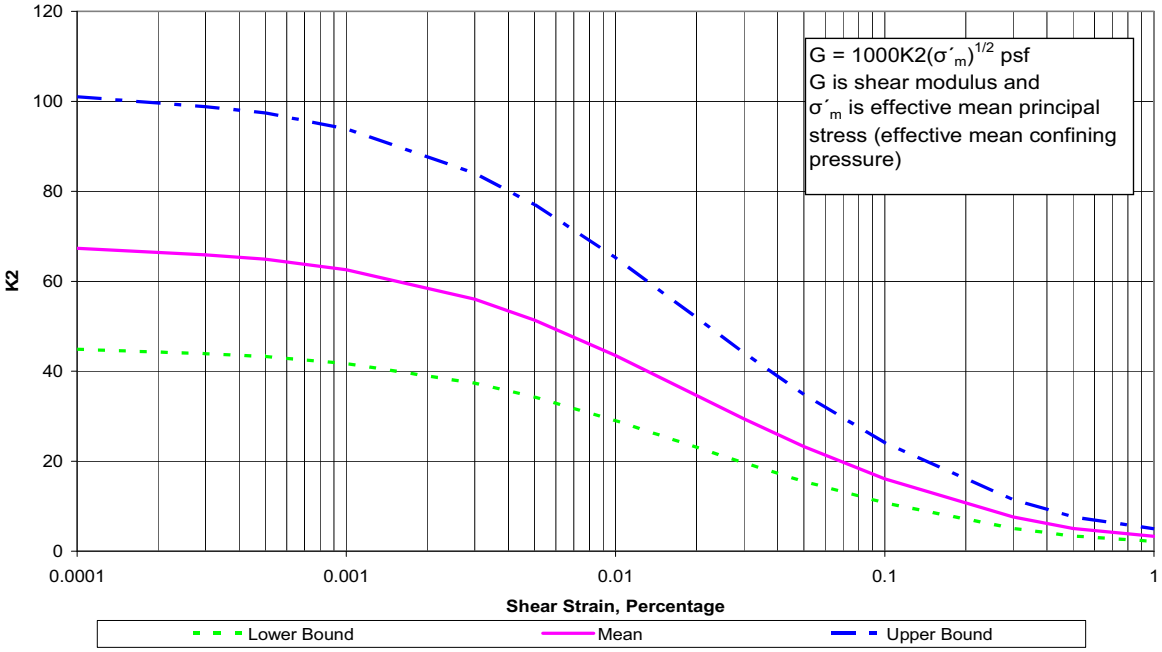

Figure 2.5S.4-80 Dynamic Engineering Parameters for Backfill (85% Relative Density) Shear Modulus Parameter, K2

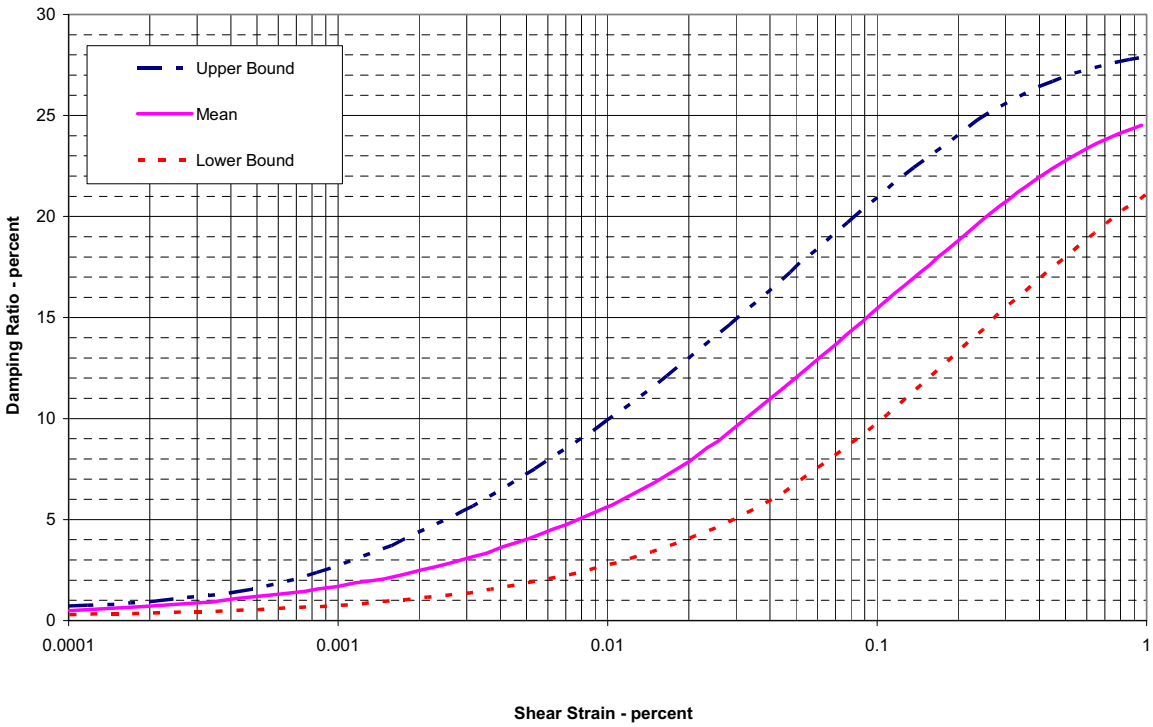

Figure 2.5S.4-81 Dynamic Engineering Parameters for Backfill (85% Relative Density) Damping Ratio