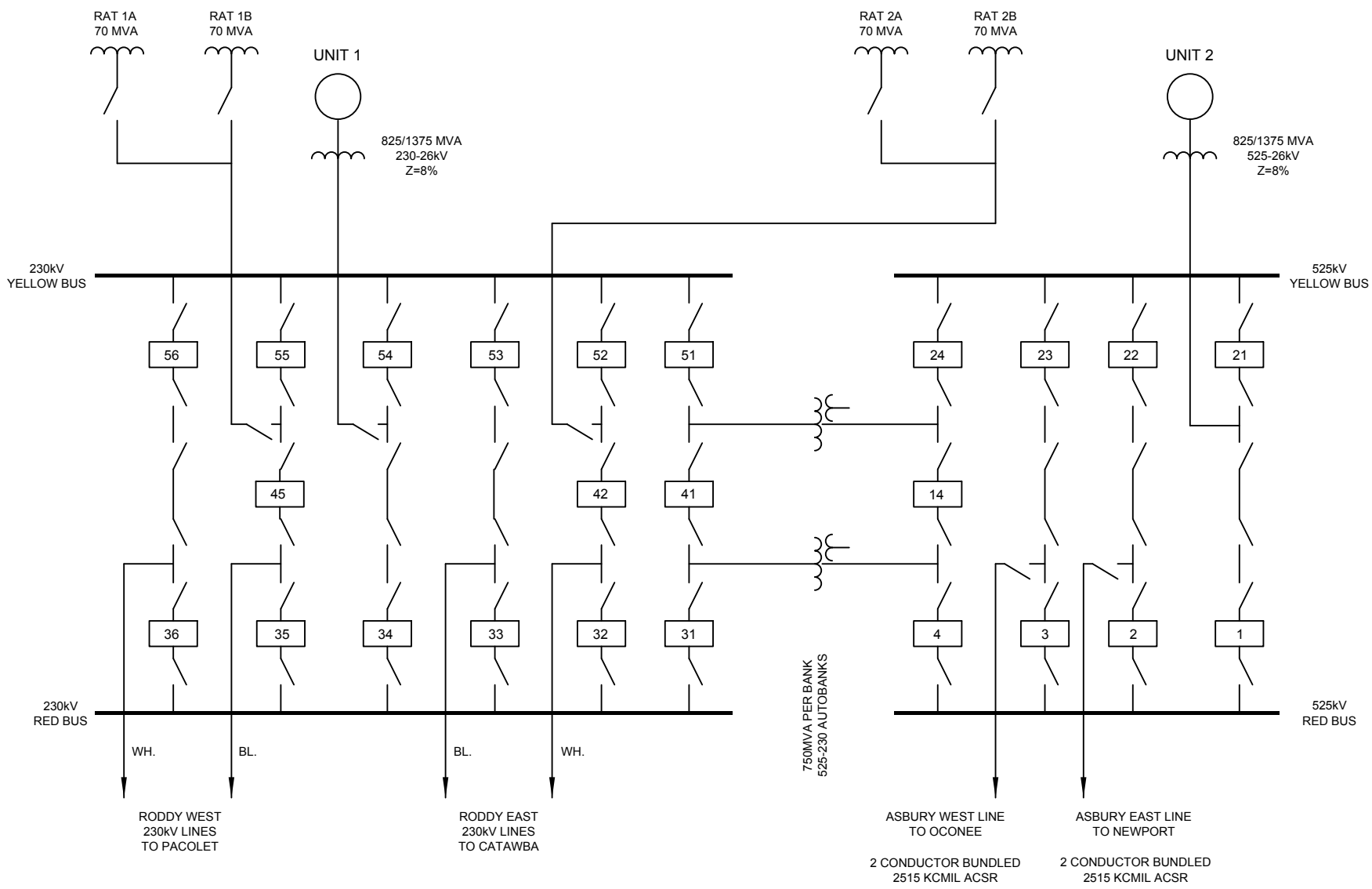

WILLIAM STATES LEE III
NUCLEAR STATION UNITS 1 & 2

Electrical One-Line of the
Interconnect Switchyard

FIGURE 3.7-1 Rev 1